TRAIL OF CTHULHU

The Final Revelation

Graham Walmsley Scott Dorward

Pelgrane Press

The Final Revelation

Five Purist scenarios for *Trail of Cthulhu*

Publisher: Cathriona Tobin

Author: Graham Walmsley

Framework Scenario: Scott Dorward

Layout: Allen Varney

Art Direction: Graham Walmsley

Art: Jérôme Huguenin

Author's Notes

The Dying of St Margaret's

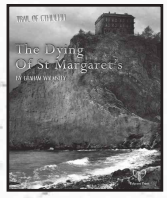

Originally published (.PDF only) November 2009.

Playtesters: Åke Nolemo, Magnus Hammarsten, Magnus Jungenstam, Michael Ericsson, Christian Extra, Belinda Kelly, Philippa Borland, David Byrne, Bernadette Foster, Sandra Wilkinson, Tony Wilkinson

The letters are based on letters from Alex Welsh in *The Scotsman,* 1909.

The Watchers in the Sky

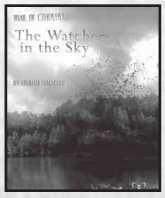

Originally published (.PDF only) February 2010.

Playtesters: Scott Dorward, Simon Rogers, Alex Fradera, Adam Kelly, Marcus Tsong, Jessica La Garde, Jessica Tirocke, Josh Halko, Erica Dahl, Jason La Garde, Guy Sodin, Åke Nolemo, Michael

The Final Revelation Copyright ©2009,2010,2012,2013 Graham Walmsley. *The Dying of St Margaret's* Copyright ©2009 Graham Walmsley. *TheWatchers in the Sky* Copyright ©2010 Graham Walmsley. *The Dance in the Blood* Copyright ©2010 Graham Walmsley. *The Rending Box* Copyright ©2011 Graham Walmsley. All Rights Reserved. *Trail of Cthulhu* is published by arrangement with Chaosium, Inc. *Trail of Cthulhu* is a trademark of Pelgrane Press Ltd. **www.pelgranepress.com**

Ericsson, Magnus Hammarsten, Magnus Jungenstam, Karin Johansson, Christopher Smith Adair, Arianne Adair, Patrick Loveland, Jay Mueller, David Ruiz, Francisco Molina, Steve Girard, Carlo Gozzi, Hugues Audet, Joe Madigan, Vince Fisher, Aaron Wallenius, Josh Ford, Shannon McNamara, Morgan Hua, Lena Budovskaya, Forrest Hetherington, Scott Tooker, Alex "Koña" García, Verónica "Gwen" Prieto, José "Van Diem" Gavilán, José "Stu" Ramírez and Alex Werden. Your suggestions were invaluable, even though we did not incorporate them all. If we have missed someone from this list, please contact us, and we will add their name.

Thanks also to Jason Morningstar for feedback. I recommend his *Trail of Cthulhu* scenario, *The Black Drop,* and his other games, particularly the horror game *The Shab al-Hiri Roach.*

Particular thanks go to Dr. Enno Siemsen and Wilhelm Fitzpatrick for the single-word German poem, "Widerkehrenderuniversumszentrumrhythmusmusikherundhintanzendereisender."

Rydal is a real town in the Lake District, although it is a beautiful village, not a dilapidated mining community.

The Dance in the Blood

Originally published (.PDF only) September 2010.

Playtesters: Steve Dempsey, Simon Rogers, Dave, Keary Birch, Pookie, Robin Poole and Will with the astonishing glasses. Thank you also to the others, especially at Concrete Cow and Dragonmeet. I forgot to note your names, which is unforgiveable, particularly since I stole your character concepts for the example Investigators. Please get in touch and we'll add your names to future editions.

Thank you also to the external playtesters: Geoff Skellams, Dave, Steve Dempsey, Simon Rogers, Declan Feeney, Bert Isla, Nick Helton, Richard Gillingham, Jonathan Goodyear and Abel Vargas, Morten Greis Petersen, Nis Baggesen, Christina Wodtke, Peter Fallesen, Jacob Zimmerman and Thomas Mørch, Alexandra Gödecke, Joachim Krisch, Clemens Huder, Nico Walter, Miriam Walter, Arne Gödecke, Guy Sodin, Vince Fisher, Joe Madigan, Aaron Wallenius, Jim Schmitz, Adrian Thomson, Leath Sheales, Angela Skellams, Jason Morton. Your feedback is invaluable. Thank you so much for your time.

Special thanks to Jérôme Huguenin for artwork.

Most of the places I have mentioned actually exist. Keswick is a pretty town in the Lake District, popular for walking holidays. Castlerigg Circle is nearby, although the Blackstone Hotel and Keswick Hospital are fictional. Manesty is a genuine and tiny village, although I have based its grey-slate buildings on nearby Grange. Both Derwent Water and Maiden Moor are real, but the Maiden House is not. Everything is more pleasant in real life than I have described it. The monsters under the soil are not, I hope, real.

The Rending Box

Originally published (.PDF only) May 2011.

Playtesters: Susan Wardell, Abel Vargas, Brian Watson, Nick Helton, Gilbert Isla, Belinda Kelly, Malcolm Edwards, Anton Delprado, Thomas, Dijiana, Åke Nolemo, Magnus Hammarsten, Michael Ericsson, Magnus Jungenstam, David Barnard-Wills, Kat Barnard-Wills, Chris Handley, Sam Handley, Aidan Jewell

The biggest credit goes to Ramsey Campbell, whose story *The Render of the Veils* inspired the description of Daoloth and the reality underlying the universe.

CONTENTS

[Italicized entries are sidebars]

The Final Revelation 5

Introduction 5
Sample Investigators 5
Doreen Mills
Paul Turner
Anthony St John
Detective Sergeant Brian Lucas
Celia Pickering
Following the Investigators' Backstories
Cast of Characters 8
Patrick Howells
Catherine Holborn
Michael Dunning
Tristan Cavendish
» *Clues* 10
» *GUMSHOE rule: Directed Scenes* 10
» *Drive Yourself Crazy* 11
Meeting 1: The Friday Group 12
Jacobs Books
The Meeting
The Mueller Hospice
» *If an Investigator Dies or Goes Insane* 14
Cracks in the World: 1
Meeting 2: A Stranger Among Us 14
The New Member
Dunning's Quality Timepieces
Cracks in the World: 2
Meeting 3: A Change of Management 16
The New Chairman
Cavendish's Flat
Cracks in the World: 3
Undermining Sources of Stability
Meeting 4: Facing Death 19
» *Adding Your Own Scenarios* 20
Cracks in the World: 4
Coda: The Horror Begins Again 20

The Dying of St Margaret's 22

Introduction 22
» *A Letter to the* Times 23
» *The Astronomical Medium* 23
» *The Colour at St Margaret's* 23
Creating the Investigators 24
» *Examples of Drives* 25
Sample Investigators 27
Alfred Botham
Reginald Fairweather, MP
Georgia Mackey
Vicky "Magpie" Smith
Bob Greene
The Seekers of Truth
Prologue 30
The School
Cast of Characters
Arrival at the School 31
High Tea and Afterward
Staying at the School
Clues
Antagonist Reaction: The Colour
» *Talking Posh and Talking Rough* 33
The San 34
Clues
The Attic 36
Clues
The Grey Sailor 37
Clues
The Workshop 38
The Machine
The Desks
Tomes
» *Think of the Children* 40
Interlude—Drives 42
The Bay 42
Clues
The Caves
» *Convention Play* 42
Epilogue 44
What Comes After
» *Pulping St Margaret's* 44

The Watchers in the Sky 46

Introduction 46
» *Creating Your Own Investigators* 48
Sample Investigators 49
Arthur Nott
Nurse Sally Williams
Professor Lucas Wright
Dr Andrea Parker
Miss Helen Howell
Cast of Characters 50
Abraham Kale
Nurse Rodgers
Nurse Wilkie
Dr Bradfield
Bartholomew Thomson
Mr Singh
Nasmyth
Dunn
Father Vincent
Derrick Rawlings
Alice
Dr Colfe
Those Left Behind 52
St Mary Bethlehem Hospital 52
Edwards Laboratory, Royal College 54
Dissection Theatre, Uni of Brichester 55
The Watchers 57
Old Library, University of Brichester 58
The Road to Rydal 60
Rydal 61
The Room on the Right 63
The Moving Hand 65
The Razor and the Stone 65
The Old Stables 66
The Flat Stone 67
Loughrigg Quarry 68
The Chase 69
Three Epilogues 70
Returning Home
1953
Bedlam

The Dance in the Blood **73**

Introduction 73
» *Timeline* *74*
Sample Investigators 74
Rosa Parker
Dr Michael Laws
Jonesy (Tom)
Viscount Hilary Exeter
Helen Long
Creating Your Own Investigators
» *Not In the Blood* *76*
Cast of Characters 77
Nigel Jones
Dr Henry Rochdale
Mary
Lisa and Bethany
Ada Walworth
Eugene Gregson
Geoffrey
Jack
» *Name Recognition* *78*
The Blackstone Hotel, Keswick 78
Bringing the Investigators Together
Noticing the Photograph
» *Inns, Hotels and Pubs* *79*
Keswick 80
Dreams 80
Static 82
Castlerigg Stone Circle 82
Manesty 83
The Wareing House 83
» *Keep Them Here* *83*
The Leeward Inn 84
The Old Schoolhouse 84
Clues in Manesty 85
» *Remembering Childhood* *86*
Keswick Hospital 86
Low Manesty 87
» *Welcome to the Sandbox* *88*
The Dance in the Blood 88
The Maiden House 89
» *Next In Line* *90*
The Ritual 91
» *This is Not a Railroad* *92*
Epilogue 92

The Rending Box **94**

Introduction 94
Sample Investigators 96
Dr Dolores Muir
Rev John Bowles
Sister Bertha
Theo Warren
Ella Mcdonagh
Cast of Characters 98
David Rabinowitz
Tulving
Mrs Baddeley
Grappa
Tom
Part I: London 99
Rabinowitz & Goldberg 99
» *Deserted* *99*
The Rending Box 100
Opening the Box
Render of the Veils
Bigger on the Inside
When You Look Away
Following
The Suckling Pig 103
Tulving's House 103
Part II: Ravenglass 103
The Thorndike Hotel 103
» *Eyes / No Eyes* *104*
Library 105
Untraceable Authors
The Knowledge
Spongy 106
Spongier
Rustling 107
Part III: Horsefalls Wood 107
Woodlands Folk 107
Grappa 109
The Tendril of Shub-Niggurath 109
The Climb 110
Forest Fire 111
Epilogue: The Turning of Shub-Niggurath 111
» *Break a Leg* *111*

Handouts **113**

The Dying of St Margaret's 113
The Watchers in the Sky 115
» *Lake District map* *116*
The Dance in the Blood 117
The Rending Box 121
» *Tulving's Folklore Bestiary* *122*
» *Stability Loss Table* *126*

Stability and Sanity Pool Loss Tables 126

THE FINAL REVELATION

Introduction

The Final Revelation collects four Purist scenarios for *Trail of Cthulhu*.

This short additional scenario is designed as a framework to allow the other four scenarios in this book to be played as a short campaign. Though The Dying of St Margaret's, The Watchers in the Sky, The Dance in the Blood and The Rending Box are all set in the United Kingdom, sharing a time period as well as some themes and elements, they are separate stories for different sets of Investigators, and would normally be separate standalone adventures.

To tie these scenarios together, *The Final Revelation* takes its inspiration from classic anthology horror films such as *Dead of Night* and *From Beyond the Grave,* presenting each of the other scenarios as a story within a story.

At various points in *The Final Revelation*, the Investigators uncover a Core Clue that ties into one of the other scenarios. At this point in the text, your group should temporarily stop playing *The Final Revelation* and start playing the scenario mentioned, using either the Investigators provided for that specific scenario or fresh Investigators created using the guidelines provided. The players should not use their original Investigators from *The Final Revelation* for any other scenarios.

Once your group has finished the other scenario, return to playing *The Final Revelation* at the point you left off.

The Final Revelation is only required if you wish to play the scenarios as a campaign. You can still use each of the other four scenarios as a standalone investigation without modification, if you prefer.

The Spine

A group of Investigators has come together in the cellar of Jacobs Books, an occult bookshop in London's West End, to try to piece together the details of what they believe to be a threat to humanity. They call themselves The Friday Group, as they meet on Friday evenings. Each of them has encountered maddening hints which no one else believes, and they are trying to discover how the threat can be combatted. This will lead them to see how others have uncovered aspects of the truth, in the form of the other scenarios in this book, about the fate of the world.

As the Investigators uncover the truth behind each scenario, aspects of it start infecting their perception of the world. Their reality unravels by degrees until they are faced with a final, inescapable truth: they had lost the battle before they even started.

The Final Revelation

The apocalyptic event the Investigators have been trying to uncover happened before they even started investigating. The stars came right, the nightmares awoke and reality as the Investigators knew it ended. They are locked in an unending cycle of madness and horror.

The Friday Group has existed through each one of these cycles, and as the reality of each breaks down, elements begin to bleed through between them. This manifests as *déjà vu,* the changing roles of other people in the lives of the Investigators, strange appearances and disappearances, and, ultimately, warnings left for the Investigators in the next cycle.

A number of clues point the Investigators to this revelation, but the main one is that the date never changes. It is always the 12th of November, 1937. This is the date the world ended and the only date that the Investigators will ever see again.

Sample Investigators

You can either use the sample Investigators provided or make your own. If you make your own Investigators, they each need some hint of impending danger they uncovered that has drawn them into The Friday Group. Use the backgrounds of the sample Investigators for inspiration.

Notice each sample Investigator has a single point of Cthulhu Mythos. This is to reflect the insights they have gained from their strange experiences rather than any academic knowledge.

Occupational abilities are marked with an asterisk (*).

Doreen Mills

Concept: Inquisitive and driven nurse
Drive: Curiosity
Occupation: Nurse
Sex: Female

Sources of Stability: Doctor Tiller, whom I work with and would let myself love if he weren't married. Reverend Clow, the vicar at my church. Annie McTavish, my beloved sister.

Pillars of Sanity: The truth will set you free. Everyone deserves to be saved. Forgiveness is God's greatest gift.

Investigative skills: Assess Honesty* 2, Biology* 2, Bureaucracy 1, Credit Rating 3, Cthulhu Mythos 1, Flattery 1, Medicine* 4, Oral History 1, Pharmacy 2, Reassurance* 4, Theology 1

General skills: Driving 10, First Aid* 10, Fleeing 10, Health 10, Sanity 10, Sense Trouble 10, Stability 10

You are a woman of deep faith and, you hope, Christian charity. This led you to become a nurse, so that you may help those who need it most. You have found it such a rewarding calling it has consumed your life. You now work at the National Hospital for Nervous Diseases in Bloomsbury, London. You never married, but you fill your life with work and God, and you cannot imagine being happier.

Actually, truth be told, your happiness has been lessened by the strange events on one of the wards. The first time you heard a coma patient whispering to you, you thought she was recovering. She never regained consciousness, but she kept murmuring incoherently about the end of days and how "they" dwell unseen amongst us and will destroy us all. None of the other staff heard this, but you weren't truly frightened until it happened with another patient. This time it was a man, but he still spoke with a woman's voice, giving the same cryptic warnings. The worst part is that you have realised the voice sounds like your own.

You have not told any of your colleagues of your experiences, as you fear you would be believed mad and lose your job.

You have seen an advertisement for a meeting of people who have had similarly strange warnings, and your first meeting will be this Friday. You are trying to overcome your concern at the possibly un-Christian nature of the group, given that they meet in an occult bookshop, in the hope they can help you understand what is happening.

Paul Turner

Concept: Haunted sculptor
Drive: Artistic Sensitivity
Occupation: Artist
Sex: Male

Sources of Stability: Arthur Stokes, my friend and fiercest critic. Agatha Jermyn, my model, muse and sometime lover. Ralph Turner, my father, without whose financial support I could not continue.

Pillars of Sanity: Art is the finest expression of humanity. Our dreams bring the world to life. My vision must be shared with those who have eyes to see.

Investigative skills: Archaeology 1, Art*4 , Art History*2, Credit Rating 2, Craft* 4, Cthulhu Mythos 1, Flattery* 2, Geology 1, Occult* 2, Photography* 2, Streetwise 2

General skills: Filch* 10, Fleeing 10, Health 10, Sanity 10, Scuffling 10, Stability 10, Stealth 10

There has never been any doubt in your mind you are talented, possessed of a unique vision that needs to be shared with the world. The problem so far is that the world has not been quick to see this, and you still rely on a stipend from your father for subsistence, and even occasionally on petty thievery. This hurts your ego, but you know your work will bring you immortality of a form, even if posthumously.

Your work has always been intuitive, drawing as much upon your dreams and imaginings as on what your eyes see. Your hands find shapes in the clay and then your conscious mind moulds them into beauty. Recently, though, you have discovered pieces of work in amongst the others that you do not remember creating, but which are undeniably in your style. They are nightmarish shapes that do not draw from any natural or imaginary source you can identify. When you look at them, you feel echoes of something you cannot define, of imminent danger.

Now all your work is tainted by your attempt to make sense of these shapes, and the few collectors who valued your work have stopped buying. You have decided to attend a meeting of people who have had similar experiences to find out if you are mad or if there really is some occult threat looming over the world.

Anthony St John

Concept: Priggish antiquarian bookseller
Drive: Arrogance
Occupation: Antiquarian
Sex: Male

Sources of Stability: Simon Pettigrew, a rival in business, but a friend for life; my wife, Nancy, whose love for me never wavers; Professor Richard Bentham, a regular customer who challenges me intellectually.

Pillars of Sanity: A man's reputation is his most valuable possession. Books hold the answers to all questions. Always be a gentleman, even to those who deserve it the least.

Investigative skills: Accounting* 2, Architecture* 2, Bargain* 4, Credit Rating 5, Cthulhu Mythos 1, History* 4, Languages* 4, Library Use* 4

General skills: Athletics 5, Driving 10, Health 10, Preparedness 10, Riding 10, Sanity 10, Stability 10

You have owned and managed St John Antiquarian Books on Museum Street for almost two decades, and in that time you have built up a reputation as one of the finest rare book dealers in London. Your clientele includes minor nobles, senior academics, members of parliament and a handful of bishops, and they have come to respect your ability and taste. Though your origins were decidedly lower middle class, you have worked to develop a more dignified persona, and this is the foundation of your success.

Recently one of your customers complained about the marginal notes in a treatise on medieval religious practices. Such notes are not uncommon in old books, but the nature of these particular ones was quite unsavoury. They hinted at truths behind the veneer of religion and of the world itself, portraying them in a most horrible light. Of course you apologised and refunded your customer, but something about the notes haunted you. They appeared to be written in your own hand.

You have since discovered dozens of such defaced volumes in your shop, all of which hint at an unimaginable and alien threat to the very existence of our world, and all in the same handwriting. It has reached the stage where you are afraid to sell a book for fear it has an annotation you have missed. Desperate for answers, you have decided to attend a meeting of people who have had similar experiences, to try to discover if you are mad or if the world really is in grave danger.

Detective Sergeant Brian Lucas

Concept: Desperate policeman
Drive: Police Detective
Occupation: Duty
Sex: Male

Sources of Stability: Detective Chief Inspector Halshaw, my mentor in the Met; Esther, my loving wife of twelve years; my widowed mother; Evelyn, who relies on me so.

Pillars of Sanity: The law protects us from chaos. Despite its evils, the world is filled with goodness. No secret can escape concerted investigation.

Investigative skills: Assess Honesty* 4, Cop Talk* 4, Credit Rating 3, Cthulhu Mythos 1, Evidence Collection* 4, Interrogation* 2, Intimidation 3, Law* 2, Streetwise 1

General skills: Athletics* 10, Driving* 10, Health 10, Sanity 10, Sense Trouble* 10, Shadowing 10, Stability 10, Stealth 10

There was no particular event that made you want to become a policeman; you always felt the world needs people like you to make it ordered and just. In your fifteen years with the Metropolitan Police, the last eight with CID, you know you have made a positive difference to many lives. While some of your colleagues become cynical, brutal or even corrupt, you think you have managed to retain your optimism despite everything you have seen.

Recently, though, you have started wondering if the job is finally getting to you. Over the last year, you have compiled a file of strange disappearances. You found the original file by accident in the records office, but were confused when it seemed the first few entries were made by yourself. You may file a lot of reports, but you generally remember them; you have no memory of these.

Since then, you have encountered a few more cases which match the pattern—people who have paranoid delusions about being watched or stalked by creatures they cannot describe and then vanish suddenly. As if this weren't strange enough, when you carried out follow-up interviews with witnesses some time later, none of them claimed to remember anything about the people who disappeared. The only evidence they ever existed is a file full of reports in your own handwriting.

When you reported this to DCI Halshaw, he suggested you were overtired and needed some leave. The implication is you have gone mad. You would have believed this, had you not heard about a group of people who have had similar experiences and meet weekly to discuss them; they may be your last chance to make sense of the world.

Celia Pickering

Concept: Perplexed mathematician, theoretical physicist and free-thinker
Drive: Thirst for Knowledge
Occupation: Scientist
Sex: Female

Sources of Stability: Jeremy, my husband and intellectual equal; Professor Charles Stanwick, my mentor in mathematics; Lucy, my precocious daughter, who has the whole world ahead of her.

Pillars of Sanity: Mathematics can explain the world. A rational mind is a healthy mind. Life is meant for joy and love.

Investigative skills: Astronomy 1, Bureaucracy 2, Credit Rating 4, Cryptography* 4, Cthulhu Mythos 1, Evidence Collection* 2, Languages*2 , Library Use* 4, Physics* 4

General skills: Athletics 10, Electrical Repair* 10, Driving 10, Health 10, Mechanical Repair 10, Sanity 10, Stability 10

Your love of numbers, logic and puzzles dates back to your childhood, when your uncle Charles, a lecturer at Trinity College, showed you how mathematics defined the world. You fell in love with the order and certainty it offered, and since then mathematics has almost been a religion to you.

Many people expected you to give up your academic career when you married and became a mother, but your passion drives you to find time for both aspects of your life. Cryptography and cyphers are your special areas of interest, and you have published many papers on the subject.

Your most recent obsession has been with a collection of strange papers stored in the Bodleian Library, known collectively as the Tyburn Manuscripts. Collected in the 17th Century, they have long been dismissed as gibberish. You realised upon seeing them they were written in a cypher you had believed you yourself created. The papers are mad ramblings, but contain many words that have no place in such old manuscripts, such as "telephone" and "motor car." Worse, they also mention you by name. The main thrust of the screeds is that humanity is on the brink of destruction by forces that defy rational description and that time itself will end.

Unable to shake the dread that this has inspired in you, you have decided to attend a meeting of other people who have had similar experiences, in the hope of making sense of it all.

Following the Investigators' Backstories

It is possible some players may want to get the Friday Group to investigate their Investigators' own backstories. While the events presented do lead into the overall mystery, investigating them further than the characters have already done will not necessarily prove fruitful. More importantly, they are not specifically tied to the rest of the scenario; they simply allow players the freedom to create their own characters and backstories.

Despite this, your group may well enjoy looking into these mysteries. If you think this would be fun, plan out or improvise some scenes to support this. These may even provide further opportunities to demonstrate how reality is changing.

Cast of Characters

Patrick Howells, manager of Jacobs Books

Patrick Howells is in his early thirties and has only been managing Jacobs Books for six months. His passion for a wide range of esoteric subjects and his well-developed social skills have led him to this position. He is a slightly-built man, shorter than average, with prominent cheekbones and large, lively eyes.

Though he has not personally had the strange experiences which have brought the members of the Friday Group together, he has heard enough from customers and occultist friends to see parts of a bigger pattern. Despite having read no Mythos tomes, he is aware of stories of the Great Old Ones and their eventual return.

Patrick does not accompany the Investigators on any investigations they make, as he has a business to run, but he wants to hear about the results.

To portray Patrick:

- Maintain intense eye contact with whomever you speak to
- Smile broadly and enthusiastically
- Be slightly twitchy in your movements, as if you were bursting with energy

Catherine Holborn, ward matron at Mueller Hospice

Catherine Holborn is in her early forties and has thick straw-coloured hair, turning to grey, which she keeps knotted in a bun. She looks undernourished and has dark shadows under her eyes. Despite her lassitude, she still wears a spotless and well-ironed uniform, and she runs her ward as efficiently as she always has.

Holborn has been a professional nurse throughout her adult life, and has spent much of it caring for the dying, but recently she has found it difficult to cope. Part of this is because she has heard and believed the horrifying story one of her patients, Anthea Davies, told her. Part of it is because she realises something is very wrong with the patients at the hospice, although she cannot quite articulate what that is.

To portray Catherine:

- Wring your hands gently and look at them often
- Speak slowly and lethargically, as if very tired
- Ask players to repeat things, as if you didn't quite catch what they said

Michael Dunning, new member of the Friday Group

Dunning owns a small shop in Shepherds Bush where he sells and repairs clocks and watches. Business is slow, but a modest inheritance augments the money he earns from the shop. He dresses immaculately in an expensive but slightly threadbare suit. He is in his early fifties, slightly portly, with fussy, precise mannerisms.

Dunning has lost all concept of time, including the purpose of the clocks he sells. He is subconsciously aware something is terribly wrong.

As a result of his hobby of pigeon racing, Dunning has come into possession of a strange bird, linked to *The Watchers in the Sky*. He put the bird in a cage in the storeroom of his shop, and his mind has been filled with nightmarish visions since. Between this and his growing confusion about time, he was drawn to the advertisement for the Friday Group in the hope of making sense of it all.

To portray Michael:

- Be cheerful and overly familiar with the Investigators
- Mention shared experiences for which no one remembers Michael being present
- Look at your watch regularly, as if checking the time

Tristan Cavendish, manager of Jacobs Books

In the chapter "A Change of Management," Tristan Cavendish replaces Patrick Howells as the manager of Jacobs Books.

Tristan Cavendish has been the manager of Jacobs Books for almost 20 years. He is a tall, angular man with a shock of white hair. He wears sombre suits and pince-nez spectacles. His personality is severe but always polite. Though he presents a very ordered façade, his experiences have changed him, and he has become quite scattered in his thoughts.

Cavendish founded the Friday Group after an experience similar to those of the Investigators. He discovered a book of mad ramblings on a shelf in the shop, and was alarmed to find he was listed as the author and it contained a number of his personal recollections. He is reluctant to speak of this, but since then his dreams have been filled with images of nightmarish creatures tearing the world apart. Using contacts at the British Library, he gained access to a number of Mythos tomes and deduced he was not simply going mad.

While Cavendish has never met Patrick Howells, he has dreamt of him, and will be alarmed when the Investigators believe Howells was a real person and not just a figment of Cavendish's imagination.

Cavendish has a number of Clues connected to *The Dance in the Blood* that he keeps in a steamer trunk in his flat.

To portray Cavendish:

- Look down your nose at people, or over your glasses if you wear them
- Address the Investigators formally, using their surnames and never their given names
- Rub your chin, as if slightly anxious

Though it is unlikely there will be violence involving these characters, use the following statistics if necessary:

Abilities: Fleeing 5, Health 5
Hit threshold: 3
Weapon: –3 (Fists, inexpertly used) or –1 (Improvised weapon)

Clues

Throughout the scenario, clues are presented as follows. First, the clue itself is given, then examples of how a specific skill might reveal that clue. All clues cost one skill point (except Core Clues). For example:

1. The box appears to have travelled far.

- **Accounting:** To purchase the box, Rabinowitz transferred money to a bank account in Alexandria, Egypt. However, the amount transferred has been calculated as a round figure in South African pounds, suggesting the seller is from elsewhere in Africa.
- **Flattery:** You compliment Rabinowitz on the contents of his shop, allowing him to explain the history of the theatrical items. Finally, you edge the conversation toward the box. Where did it come from, you ask? He looks puzzled. He bought it from a gentleman in South Africa, he says. But, on the telephone, the gentleman said he had brought it from Australia.

Here, **Accounting** and **Flattery** are merely examples of how the clue might be revealed. *Any* skill, plausibly used, reveals the clue. To get the same clue from Rabinowitz, in this example, an Investigator might use **Reassurance** or **Intimidation**. Alternately, you might invent a way **Craft** could uncover the clue; perhaps by examining carvings on the box, an Investigator realises they come from many cultures.

In most cases, any skill, plausibly used, reveals any clue. Sometimes, however, it seems implausible a skill would reveal a clue. For example, it is hard to see how **Medicine** or **Cop Talk** could reveal anything about the box. But if you think a skill could work, then give the clue away.

There is one exception. Some clues can only be revealed using the **Cthulhu Mythos** ability. Without using this ability, the Investigators will never fully understand the mystery. Thus, to understand the horror, the Investigators must spend **Cthulhu Mythos**. This, of course, will send them mad.

GUMSHOE rule: Directed Scenes

When following the characters in personal moments, use directed scenes to compress time and share your dramatic intent with the players.

In a directed scene, you place one or more PCs in a scene just as it's getting interesting, avoiding the preliminaries and pedestrian connective detail a talented writer or film editor always cuts out of a story.

You stage a directed scene for Ralf's character, Michel. "You're in Thelma's hotel room, the slime from the green blurry things still marring your sport coat. She's throwing bottles at her locked bathroom door. Judging from the terrified, whiskey-rotted voice on the other side, she's got a man in there."

If the player appears puzzled, you may choose to give him an assignment of sorts, explaining what the scene is meant to establish: "Here you're to dramatize your relationship with Thelma."

Directed scenes may establish Sources of Stability, risk factors, or personal goals, moving them from the static potential of entries on the character sheet to dramatic enactment in actual events unfolding before the entire group. Juice them up by enlisting the other players to take on supporting roles during these scenes. Give them a brief description of the supporting character, and tell the chosen player what that character wants to accomplish.

Lynne seems a little bored by the proceedings, so you assign her the role of Thelma. "You love Michel like the son you never had, but he's always trying to get between you and your pleasures. Your intention is to get rid of him as quickly as possible, with a minimum of fuss and hurt feelings."

Once a directed scene has dramatized the character aspect you want to establish, and seems to be running out of steam or headed off on a tangent, end it by cutting to a new scene. To maintain forward momentum and avoid confusion, it's best to make the next scene a standard one involving all of the group and concerning the main action, rather than another directed scene.

Drive Yourself Crazy

One of the pleasures of *Trail of Cthulhu* is going mad. To assist players in doing so, use these alternative rules, which hand the responsibility for Stability checks over to the players.

First, give the players the Stability Loss Table at the end of this book. Then, instead of calling for Stability checks yourself, let players call for them, whenever something happens that disturbs their Investigator. Let them set their own potential Stability losses, using the charts as guides.

To further encourage madness, ignore the usual penalties associated with low Stability. That is, when Investigators fall below zero Stability, they get no penalty to General Ability checks and can spend Investigative Abilities.

Additionally, let players have the Cthulhu Mythos Stability and Sanity Loss table. Whenever they discover something using the Cthulhu Mythos ability, ask them to decide *their own* Stability and Sanity losses, using the table as a guide.

These rules encourage players to *enjoy* going mad, rather than resisting it. They treat Sanity and Stability loss as a pleasure, not a punishment. In an ideal game, the players seize on every attempt to lose Stability and Sanity.

To help them, and you, the following symbols indicate a potential Stability or Sanity loss and suggest how much it should be. The symbol on the left shows a Sanity loss; the one on the right shows a Stability loss.

The number in the symbol indicates the Sanity or Stability number to use. If the symbol contains two numbers separated by a slash, the text explains which number to use.

For particularly nasty Mythos entities, a smaller number appears in brackets. This indicates the loss the Investigator suffers even their Stability check succeeds.

All Stability checks are Mythos-related unless otherwise noted.

Rave On

With luck, the Investigators will go insane. However, by the standard rules, they must leave the game when Sanity reaches zero or Stability reaches –12. Not only is this a disincentive, it robs the player of the opportunity to play someone truly, utterly mad. This alternative rule, then, allows mad Investigators to continue playing.

When Sanity reaches zero or Stability reaches –12, the Investigator goes incurably mad. Get the player to roleplay this. Yet, like Danforth in *At The Mountains Of Madness,* the Investigator can continue to function. They can even use Investigative and General skills.

However, the Investigator can no longer gain or lose Sanity or Stability. The Investigator is, effectively, finished. He or she is an empty shell, barely able to function. The player should retire the Investigator at the earliest opportunity—perhaps at a break in the action; probably at the end of the game session; certainly, by the end of the Investigation.

Meanwhile, however, the Investigator keeps going, powered by adrenaline and madness.

Keep Your Head

Use this optional rule when Investigators face a huge Stability loss.

When an Investigator would lose enough Stability to go incurably insane, the player may instead choose to lose Sanity. For each Sanity point sacrificed, the character keeps 3 Stability points that would otherwise be lost. The Investigator retains peace of mind by seeing a greater and more terrible truth.

The player makes this decision *after* the Stability roll, whether it fails or succeeds.

For example: After escaping from Horsefalls Wood, Dolores Muir has Stability –2 and Sanity 6. Then she sees Shub-Niggurath. She fails her Stability roll, meaning she faces a loss of 11 Stability and 4 Sanity. This would take her below –12 Stability, making her incurably insane. Instead, she chooses to sacrifice an extra point of Sanity, but retain 3 Stability points. Hence, she loses 8 Stability and 5 Sanity, taking her to Stability –10 and Sanity 1.

Meeting 1: The Friday Group

The Friday Group meets at 6pm weekly in the cellar of Jacobs Books, an occult bookshop on a quiet side street off Charing Cross Road. The group was started by Patrick Howells, the manager of the bookshop, who placed an advertisement in *The Times* calling for people who have had strange premonitions of doom to come and tell their stories. This was prompted by discussions with a customer—ask the players to nominate one of their characters for this role—who came to him for advice. This sparked his curiosity, as he had heard similar rumours from other sources. If nothing else, he believes the meetings will provide material for a book.

Jacobs Books

Jacobs Books is located in the middle of a row of other specialist and antiquarian bookshops on Cecil Court, a side street in London's theatre district. It has been selling occult and esoteric books since 1887, and has a reputation as one of London's premier occult bookshops.

The main floor is filled with floor-to-ceiling bookshelves, which cover each wall, and customers can find works on any almost esoteric subject they can imagine, with the exception of the Mythos. The books in this section are all current publications; rare and out-of-print volumes are kept in the cellar. Access to the cellar is by appointment only.

The cellar is a large, clean, brightly lit room. Locked glass-fronted cabinets against each wall contain a large collection of old books, many bound in leather. When there are meetings, plain wooden chairs are taken out of a storeroom and placed in a circle in the centre of the room.

The Meeting

Start the game by having the Investigators arrive one by one for a meeting of the Friday Group. This, as far as the Investigators are concerned, is the first time everyone has met. Take the role of Patrick and make introductions. This is a chance for the players to describe their Investigators to each other.

Use questions from Patrick to draw out each character's backstory. Patrick is genuinely interested in the details, and will react with a complete lack of scepticism. This is a good chance for players to add extra details. Encourage other players to ask questions.

Once the introductions are complete, Patrick also wants to know what each character thinks is going on. Is there a genuine threat to humanity? Given that each character has a point of **Cthulhu Mythos,** this is a chance for players versed in the Mythos to offer theories.

Patrick has memories of previous versions of this meeting, although he is not consciously aware of the fact. This manifests as him asking questions about the well-being of Investigators' Sources of Stability before they are mentioned, or making reference to an Investigator's job without having been told what they do for a living.

Catherine Holborn, a nurse who works at a hospice in Croydon, was due to attend the meeting but cancelled at the last minute because of an emergency. Patrick is particularly disappointed by this, as she claimed she had some concrete evidence. He mentions he had planned to call on her, but has yet to find the time; maybe the Investigators would like to do this instead.

1. Patrick has knowledge of the Mythos.

- **Cthulhu Mythos:** While Patrick is telling you about people who have had similar experiences to yours, he mentions the phrase, "The Opener of the Way." Before you realise it, you hear the name "Yog-Sothoth" come out of your

mouth. You are not sure what that means, but Patrick's eyes light up in recognition. "He's in your dreams, isn't he? The Great Old Ones are returning and they will reclaim the world from us."

- **Reassurance:** As you tell your story, Patrick's eyes go wide with fear. You place a comforting hand on his arm and tell him that you're frightened too. Hesitantly, he tells you he knows of legends of ancient gods, known as the Great Old Ones, who will return one day and remake the world in their image, and your story reminds him of this.

2. Patrick knows details about the Investigators without having met them.

- **Intimidation:** This meeting has to be some kind of confidence trick, as Patrick has obviously been digging into your backgrounds. You confront him directly, grabbing the lapels of his jacket and shaking him, demanding to know what his game is. He is frightened almost to tears, but he swears he has no idea why he knows these things.
- **Assess Honesty:** After Patrick makes another reference to your personal life, you ask him directly if he has been researching you. His eyes hold genuine confusion as he says you must have told him. A moment later he says no, he just knew, and everything about his manner indicates he is telling the truth.

The Mueller Hospice

The hospice where Catherine Holborn works is on a tree-lined street in a residential area of Croydon, a suburb to the south of London. The surrounding area is filled with semi-detached houses and is largely peaceful. The building that houses the hospice is a modestly sized, single-storey stone building with well-kept grounds.

The rooms and corridors inside the hospice are painted white, and everything is clean. Large windows are set in the external walls, and sunlight fills the building. The air smells strongly of disinfectant and surgical spirits, but there is an underlying smell of human sickness that nothing can completely mask.

There are two main wards—Gladstone and Bennett wards, named for benefactors—each of which houses a dozen beds. The hospice is at full occupancy, and three nurses work each ward, including the matrons. Catherine Holborn is the matron of the Gladstone ward, and is on duty when the Investigators arrive.

Catherine may be surprised to receive a visit from the Friday Group if they have not telephoned ahead, but she is not displeased to see them. She had every intention of going to the meeting, but did not have the energy. She relishes the chance to introduce the Investigators to the woman in Bed 8 so they can hear her story and offer advice about what it may all mean.

1. No one dies at the hospice any more.

- **Medicine:** While idly looking over the charts clipped to the end of one of the beds, you notice the patient's blood pressure is more than dangerously low. After checking the other charts, you can see no reason most of these people are alive. One of the nurses confirms the patients stopped dying a long time ago, but she can't say exactly when.
- **Pharmacy:** You notice one of the nurses giving a patient a large shot of morphine. Based on your quick mental assessment of her weight and the amount of morphine in the syringe, you calculate the shot is many times the expected lethal dose. When you challenge the nurse about this, she shakes her head sadly. She says she could give any patient here all the morphine in the hospice, and he or she would only sleep.

2. The date never changes on the paperwork.

- **Accountancy:** There are a number of invoices on a spike on the edge of the matron's desk. You notice the date of each one is the 12th of November. More unusually, the due date on each is also the 12th of November. When you ask the matron about this, she looks blankly at you and says, "But that's the date."
- **Bureaucracy:** Your eyes are drawn to the paperwork on the matron's desk. There are patient records, admission forms and various reports. The date on each one is the 12th of November, which is also the date on her desk calendar. Moreover, the date on each entry on the forms is also the 12th of November. When you ask the matron about this, she looks blankly at you and says, "But that's the date."

3. Core Clue: The patient in Bed 8.

Mrs Holborn asks the Investigators to speak to the old woman in Bed 8 and hear what she has to say. The woman is wasted and shrunken, with greying, cracked skin, and appears dead at first sight. Anyone approaching the bed can hear her breath rattling. This is Anthea Davies, the former headmistress of St Margaret's School. As her health failed completely, she was taken in by family in London, and finally brought to the hospice when it seemed death was imminent.

Miss Davies' imperious manner has deserted her now, and she is desperate for companionship and comfort. She has told Mrs Holborn the story of St Margaret's and the undying bodies she discovered in the caves. She is only too pleased to repeat it to anyone who speaks to her.

A small wooden box on her bedside table contains a number of photographs Miss Davies took at St Margaret's as proof she is not merely insane. St Margaret's has been quarantined now, due to a suspected anthrax outbreak, and none of the other former residents of the island will speak of their story, so Miss Davies feels completely isolated and helpless.

As the Investigators begin to listen to Miss Davies and look through the photos, stop playing *The Final Revelation* and start playing The Dying of St Margaret's with a fresh set of Investigators. Once you have finished playing The Dying of St Margaret's, start playing *The Final Revelation* again, picking up where the Investigators left off at Miss Davies' bedside.

Looking through the photographs provokes a Stability check.

2

Cracks in the World: 1

Every time the group plays one of the embedded scenarios, the truth of that scenario infects their reality in some way, changing it. As the world the Investigators inhabit is largely sustained by their own self-delusion, the revelation brought about by each scenario makes it slightly harder for them to maintain this delusion. In addition to this, there is also the growing revelation that time and the world as they know it have ended.

After experiencing The Dying of St Margaret's, the Investigators notice items and people they encounter seem to be a bit older and more decrepit. When they return to Jacobs Books, they discover everything is covered with a light patina of dust. Some of the older books crumble if handled. Patrick Howells is less animated, and his skin and hair seem to be those of an older man. No one apart from the Investigators notices these changes, and NPCs try to laugh them off, saying the dust must be the result of the cleaner having the day off, or their aging is simply tiredness.

3

Meeting 2: A Stranger Among Us

After the previous chapter has played out, move on to this chapter by telling the players it is Friday again and nearly time for the next meeting. If any players decide their Investigator(s) wanted to do something between the meetings, play that out without reference to the day of the week. As soon as your players are ready to move on, tell them it is Friday again.

If an Investigator Dies or Goes Insane

It is highly unlikely any Investigators will die in the course of this scenario, as violence is not expected, but it is always a possibility. Given that death is now as meaningless as time in the fractured reality the Investigators occupy, any Investigator who dies during the course of play cannot escape so easily.

The next time the Friday Group meet, the dead Investigator simply arrives at the meeting with no memory of the event that killed them. Memories of the rest of the events to date are intact, but between the events leading up to their death and their return to the group, everything is a blank.

An Investigator returning in this way prompts a Stability check for any group members who saw him or her die.

7

Insanity is a much more likely outcome than death. If an Investigator can no longer maintain the delusion of the world as they once perceived it, the Investigator goes insane. Though their reality does not break down completely ahead of everyone else's, let the player know their Investigator now understands the world around them is a complete fabrication, and they fear they are just the puppet of a monstrous alien god. Encourage them to act upon this in any way they see fit.

The New Member

There is an additional member at the next meeting of the Friday Group. His name is Michael Dunning, and he greets the Investigators warmly by name as they arrive. None of the Investigators remember having seen him before, although Patrick appears to know him. Both Patrick and Michael insist that Michael has attended every meeting. Although there has only been one meeting so far, Patrick and Michael seem to remember others; no one is exactly sure how long the group has been in existence.

Dunning is keen to share the discovery he has made since the last meeting. After uncovering it, he has decided he is definitely not mad to believe there is a malign alien presence in the world, and he wants to show it to the rest of the group. He refuses to travel with it, though, and has it locked up in his shop.

Dunning's Quality Timepieces

Dunning's shop is in a terrace of shops on Uxbridge Road in Shepherd's Bush, west London. The façade is painted dark green, and the paint is beginning to look shabby. There is a wide selection of clocks and watches in the window, but there is a thin coating of dust over most of them.

The shop itself has a number of glass-covered counters and display cases containing watches and smaller clocks, as well as a number of larger pieces standing freely. The shop itself is quiet, and it is soon apparent not one of the timepieces is ticking. If asked about this, Dunning is confused and has no idea why he would need to wind a clock.

The back room has both a heavy padlock and a mortise lock protecting it, and Dunning unconsciously checks over his shoulder before unlocking them. The room itself is used mainly as a storeroom, and contains tools, spare parts, a work bench and cleaning supplies.

1. Dunning has lost all concept of the purpose clocks serve.

- **Flattery:** You compliment Dunning on the quality of a golden carriage clock in one of the display cases. He brightens noticeably and unlocks the case to show it to you. He points out the craftsmanship of the case and delicacy of the filigree, but when he comes to describe the workings, a look of panic crosses his face. He starts turning the hands round with a finger, then looks at you and asks, "But what does it do?"
- **Craft:** Admiring the delicate filigree of a large, golden carriage clock, you ask Dunning for a closer look. He takes it out of the case, and you turn it over in your hands. Unconsciously, you wind it up and it starts to tick loudly. Dunning looks alarmed and asks if you've broken it, as he cannot understand why it is making that noise.

2. Core Clue: The thing in the cage.

Dunning's hobby is pigeon racing, and he keeps a large coop on the roof of the shop. One day, he discovered a strange bird amongst his pigeons, sitting quietly on a perch while the rest of the birds flew about in a panic and tried to keep away from it.

He managed to capture the bird easily. He put it in a small brass cage so he could examine it more closely, as it was quite unlike anything he had ever seen. The wings appear to resemble human hands, and one of its eyes looks more feline than avian. It never makes a sound, and only sits still in the cage, watching. Dunning has offered the bird food and water, but it never eats or drinks.

Sometimes the bird sings. No one who hears it can quite identify what the sound is, or remember it properly afterward, but the impression is of many voices whispering. Hearing it brings visions and nightmares, like a vivid waking dream.

When Dunning shows the bird to the Investigators, it starts to sing almost immediately. At this point, stop playing *The Final Revelation* and start playing The Watchers in the Sky with a fresh set of Investigators. Once you have finished playing The Watchers in the Sky, start playing *The Final Revelation* again, picking up where the Investigators left off in Dunning's storeroom.

Hearing the bird's song and seeing its otherworldly nature provokes a Stability check.

4

Cracks in the World: 2

After the players have been through The Watchers in the Sky, the Investigators start noticing minor deformities in the people they meet. Any time an NPC appears after this point, mention a deformity as part of their description. This includes the people they already know, although the Investigators have never noticed these deformities before. For example, Dunning now drools when he speaks, and the saliva is discoloured and pungently malodorous.

The more the Investigators start to look for these deformities, the more they find. If any of them decide to check themselves, they notice they have also been affected. Possible deformities:

- Mismatched eyes, with one looking small, dark and barely human
- A withered hand, curled into something like a claw
- Crooked, sharp teeth
- A minor palsy that turns the person's smile into a leer
- A strong, musky body odour
- A change in the skeletal structure that makes movements strange and lurching
- A grating, bubbling quality to the voice
- A greyish pallor to the skin

The realisation this is widespread provokes a Stability check.

5

Meeting 3: A Change of Management

When the Investigators gather for the next meeting, Tristan Cavendish greets them and calls the meeting to order. Cavendish believes this to be the first meeting of the Friday Group and is adamant no one named Patrick Howells has ever worked at Jacobs Books. He is just as shaken as the Investigators if they insist otherwise.

1

The New Chairman

Once the confusion has been addressed, Cavendish says he has been carrying out some research and believes he has made a breakthrough. There is too much material for him to bring to the shop, so he invites the Investigators to join him at his flat.

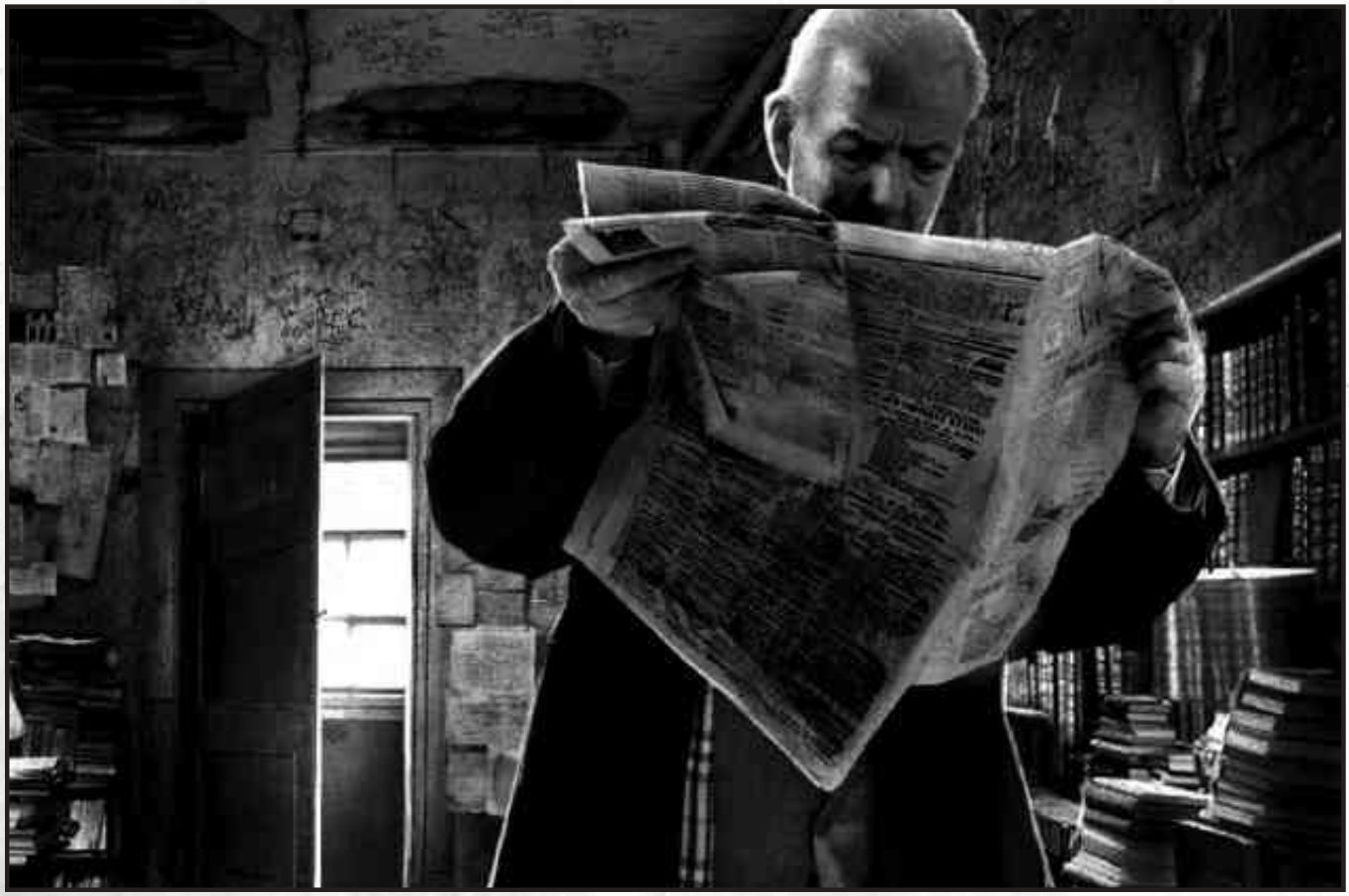

1. Tristan Cavendish is genuinely the manager of Jacobs Books.

- **Occult:** You use your shared interest in esoteric matters to gain the trust of some members of the staff. They confirm Tristan Cavendish is the manager and he has worked at Jacobs for as long as they can remember. None of them know Patrick Howells. You reluctantly find yourself believing them.
- **Credit Rating:** Losing patience, you demand in your most authoritative voice to see the owner of the shop. You are told he rarely visits the shop, but you are given access to his office. After a quick search through the filing cabinets, you find records of employment that indicate that Tristan Cavendish is indeed the manager of the shop. There is no record of an employee named Patrick Howells.

Cavendish's Flat

Tristan Cavendish lives in a small one-bedroom flat in Lambeth, just south of the Thames. The surrounding area is run-down and a bit seedy, and the building in which Cavendish lives is no different. Though he presents a very professional face to the world, his work does not pay well, and he keeps his expenses down to allow him money to buy books.

The flat itself is dingy and badly ventilated, with old, faded brown wallpaper and a worn carpet. The smell of cooking cabbage from the flat below fills the air. Cavendish lives alone, being a bookish bachelor with no time for frivolous pursuits.

As Cavendish became obsessed with making sense of his dreams, he stopped paying attention to his surroundings. His flat is extremely untidy. There are piles of books on every surface and on the floor, and loose notes, manuscripts and newspaper clippings scattered around and pinned to the walls. The walls themselves are a chaos of notes and clippings, many annotated in a spidery hand.

Any Investigator who spends time going through the newspaper clippings notices that all clippings with a visible masthead, regardless of how old they appear to be, are dated the 12th of November, 1937. Cavendish sees nothing unusual about this, as that is today's date.

1. The entities the Investigators fear have already manifested.

- **Cryptography:** As you look through the scattered articles that cover every surface, you notice there are number sequences unrelated to the text. Cavendish says he has never noticed them before. You quickly work out it is a simple cypher and decode the messages. Each is a variation of "They are already manifest and the world is theirs. We are lost."
- **Languages:** A number of notes include words from a wide range of languages. Cavendish says these are messages he has picked up from classified advertisements in a number of publications, but has not managed to translate. There is little sense to them, as the grammar is chaotic, but you eventually decide most are variations of "They are already manifest and the world is theirs. We are lost."

2. Core Clue: The steamer trunk.

There is an old wooden trunk to one side of Cavendish's sitting room. After the Investigators have had a chance to look at the other notes and clippings, Cavendish offers to show them concrete proof there are monsters walking unseen in the world. He casually pushes the notes and books off his coffee table and puts the trunk on top.

The trunk contains some folders, notebooks and more newspaper clippings. They revolve around a series of incidents at the village of Manesty in the Lake District, and ultimately tell the story of *The Dance in the Blood*.

When the Investigators begin to examine the contents of the trunk, stop playing *The Final Revelation* and start playing The Dance in the Blood with a fresh set of Investigators. Once you have finished playing The Dance in the Blood, start playing *The Final Revelation* again, picking up where the Investigators left off, going through the contents of the chest.

After the players have played The Dance in the Blood, they find press clippings telling how Manesty was destroyed in what is believed to be an earthquake, although the wounds discovered on some of the victims seem to indicate they were devoured by animals. There are no known survivors.

The trunk also contains a glass jar, filled with discoloured alcohol, which preserves what appears to be a human hand. The hand has been partially dissected, with skin and flesh peeled away from the palm and fingers. This has revealed something thoroughly inhuman underneath, as per the monsters in The Dance in the Blood. The fingers still tremble occasionally, stirring the sediment in the jar. Seeing this provokes a Stability check.

4

Cracks in the World: 3

At this stage, the Investigators have prodded and poked at their illusion of reality so much that the details are getting muddled. The people in their lives no longer maintain the same roles, and memories can no longer be trusted. The good in people is corrupted, and they have monstrous natures. You can take this as licence to contradict minor details of what has happened, but be careful of overdoing it. This can alienate the players and make them feel their Investigators' actions are being invalidated.

Undermining Sources of Stability

After playing though The Dance in the Blood, take the players through a series of Directed Scenes. Each of the Investigators finds one of their Sources of Stability to be changed in some inexplicable way. Brief another player on what the change is, and ask them to play that Source of Stability for the scene.

Here are some examples for each of the sample Investigators. If your players have created their own Investigators, tailor new scenes for them.

Doreen Mills's sister Annie turns up on her doorstep in tears. She says her husband, Frank, has started drinking again, and she fears this will make him violent again. Doreen knows Annie's husband is Callum McTavish, and he has never had a problem with alcohol, but Annie maintains her husband is Frank Terry and he has been a violent drunk for years. Annie has no idea who Callum McTavish is.

Paul Turner returns to his studio to discover all his work there smashed to pieces. Agatha Jermyn, whom Paul knows as his model and lover, is in a jealous rage. She wants to know why he ever married her if he was going to sleep with every woman he meets. Of course, Paul has no memory of ever being married. Agatha wants to destroy his reputation over his constant infidelity.

Anthony St John visits his shop to discover the sign outside reads Pettigrew Fine Books. Simon Pettigrew owns the shop now and is getting tired of the fact that St John refuses to let go after Pettigrew bested him in business and bought his former shop. Pettigrew wants St John out of his life for good and is willing to be cruel to achieve this.

Brian Lucas comes home to find that DCI Halshaw has dropped by to see how Lucas is adjusting to life after the police force. Halshaw apologises again for the necessity of the dismissal proceedings after the degree of Lucas's insanity became apparent, but hopes Lucas will understand there is no place for a lunatic on the force. Of course, Lucas has no memory of anything other than being told to take some leave.

Celia Pickering comes home to an empty flat, with no sign her husband and son live there. She can raise Jeremy on the telephone, via his parents. Jeremy angrily reminds her he asked her not to call unless it was an emergency, and maybe things will be easier between them once the divorce has been finalised. He is still angry she put her work ahead of her family, and hopes his new fiancée, Theresa, will prove a better mother to Lucy.

Meeting 4: Facing Death

As the Investigators arrive for the next meeting, they become disoriented. The turning from Charing Cross Road that should take them into Cecil Court leads them onto a different road, Saint Martin's Lane, which should run parallel. As they try to get their bearings, they see a turn-off to Cecil Court from Saint Martin's Lane, although it should not be there.

The Cecil Court it leads to is different from the one they knew. The shops are all present, but most have broken windows and peeling paint. The air is still and quiet, with no traffic noise and no other pedestrians in sight. Grime, broken glass and scraps of old newspaper are everywhere. The newspapers are all dated the 12th of November, 1937, but are yellow and faded.

6

The entrance to Jacobs Books is still in the same place, although the door is hanging off the hinges. Inside, the bookshelves have been overturned and broken, and there are scraps of paper and mouldering books scattered everywhere. No one is present.

Down in the cellar, thick dust and spider webs are everywhere. The chairs are arranged in a circle, as if for the meeting. In each chair sits a desiccated corpse. Cursory examination identifies these as the remains of Tristan Cavendish, Michael Dunning and each of the Investigators. The clothes and personal effects of the Investigators' corpses match what they are wearing and carrying at that moment.

7

In the hand of one of the corpses is the book which serves as the Clue leading to The Rending Box. As with the other embedded scenarios, play through this once the Investigators discover this Clue. In this case, as well as deciding what the Clue is after the play-through, the Investigators also find the book from Tuving's library titled *The Final Revelation*. Point out that the narrative mentions each of the Investigators by name and describes them exactly. The final pages end at the point the Investigators discover the book in the cellar.

7

1. The bodies in the cellar are real and are those of the Investigators.

- **Biology:** Overcoming your initial revulsion, you examine the bodies carefully. They are definitely human remains and have been dead for long enough to become mummified. The distinguishing features you find—moles, dental work, scars—all match your companions. You cannot imagine any way this could be a hoax.
- **Evidence Collection:** You take a deep breath and start rummaging through pockets, handbags and briefcases, gathering all the personal effects you can find on the bodies. Comparing wallets, jewellery, watches and clothing, you determine these bodies not only look exactly like you and the other members of the group, but are carrying exactly the same items you are all carrying now.

2. Core Clue: *The Rending Box.*

Clutched in the hand of one of the corpses is a small, leather-bound book. The title on the spine is *The Rending Box,* and a quick examination shows a title page confirming the title. The publisher is Denny Publishing, a well-known vanity press in London, and the author is listed as the Investigator who has just discovered the book.

When one of the Investigators starts reading the book, stop playing *The Final Revelation* and start playing The Rending Box with a fresh set of Investigators. Once you have finished playing The Rending Box, start playing *The Final Revelation* again, picking up where the Investigators left off in the cellar of the bookshop.

3. Core Clue: The apocalypse the Investigators were trying to prevent has already happened.

- **Library Use:** The display cases have been opened and a number of the volumes they contained are scattered around the room. Your attention is drawn by some of the older-looking volumes lying open next to where your corpse was sitting. Going through them, you gradually piece together an awful truth: The world ended on the 12th of November, and the time and space you perceive are a lie your fractured mind tells itself.
- **Cthulhu Mythos:** Scattered around the chair that holds the corpse bearing your face, you see strange diagrams and pages torn from books. There is something disturbingly familiar about them, and as you start to read them, the pieces come together in your mind. There is nothing left to fight. The world ended on the 12th of November, and the time and space you perceive are a lie your fractured mind tells itself.

Use the rule of Anagnorisis when the Investigators uncover these truths. There is nothing left to fight. The world is already lost. Each Investigator loses his or her Drive and 8 Stability points.

Cracks in the World: 4

Once the Investigators leave Jacobs Books again, they find the world a changed place. The illusion they have been living has been stripped away, and they can now only see what the world has become. As they pass though the remains of London, the evidence mounts.

- There is no sun in the sky, and the clouds writhe like tendrils.
- Everything is illuminated by a sickly purple glow with no identifiable source.
- The few people walking the streets are changed in grotesque ways: long, insect-like limbs; bulging white eyes, the colour of dead flesh; mouths all over their bodies that scream and cry; putrescent skin which leaves trails of sticky liquid behind.
- The topology of London is in chaos, with some streets seemingly going on forever, while others twist and change direction as soon as no one is observing them.
- There is no home for the Investigators to return to, and no way to escape the chaos and horror this new world embodies.

11

Coda: The Horror Begins Again

The Investigators wander through the nightmarish and mutating London for what seems an eternity. As they do so, the world becomes progressively more abstract: buildings, roads and people gradually disintegrate into what may be vapour, dreams or pure thought. Normal human senses have no use in this world. All perception of time and space fails. Maybe this is death, maybe the new world is too unimaginable for their minds to perceive, or maybe what the Investigators hold to be their selves are just stray thoughts in the mind of an alien god. Whatever the truth, there is no escape.

The only anchor left is a memory of a life that made sense. There is an echo of it they can perceive and almost touch, filled with little snapshots of the past. Ask each player to describe a warning they would try to give to their Investigator about what is to come, if they could send a message back to the past, and how it would appear to the Investigator. The communication is made difficult by madness and the eddies of time, so only hints can be passed through and only in an oblique form.

Then, briefly, cut back to that earlier time before the horror began and describe each Investigator receiving this cryptic warning. The hints are maddening and defy explanation. Happily each Investigator has just seen an advertisement in *The Times* for a group which is working to understand similar things.

Adding Your Own Scenarios

If you have additional scenarios you think would fit the tone of this campaign, it would be very easy to insert them. There are only a few requirements.

The tone of the scenario should be consistent with the Purist mode. The purpose should be to further convince the Friday Group their world is in grave danger and those who fight it are doomed.

The scenario should involve a distinct group of Investigators whose story the Friday Group are uncovering. Using the Friday Group themselves is inadvisable, as their story is separate, and any doom they face in an embedded scenario would undermine it.

Some piece of evidence needs to survive the embedded scenario for the Friday Group to discover. This can be defined once your group has played through the embedded scenario.

Some aspect of the embedded scenario infects the reality of the Friday Group. There is a Stability check for realising this has happened.

The scenario should probably be embedded before the section leading to *The Rending Box*, as it will be difficult to motivate the Investigators to follow new clues after this stage.

You may also wish to create a new book, with excerpt, for the scenario, and have it appear in Tuving's library in *The Rending Box*.

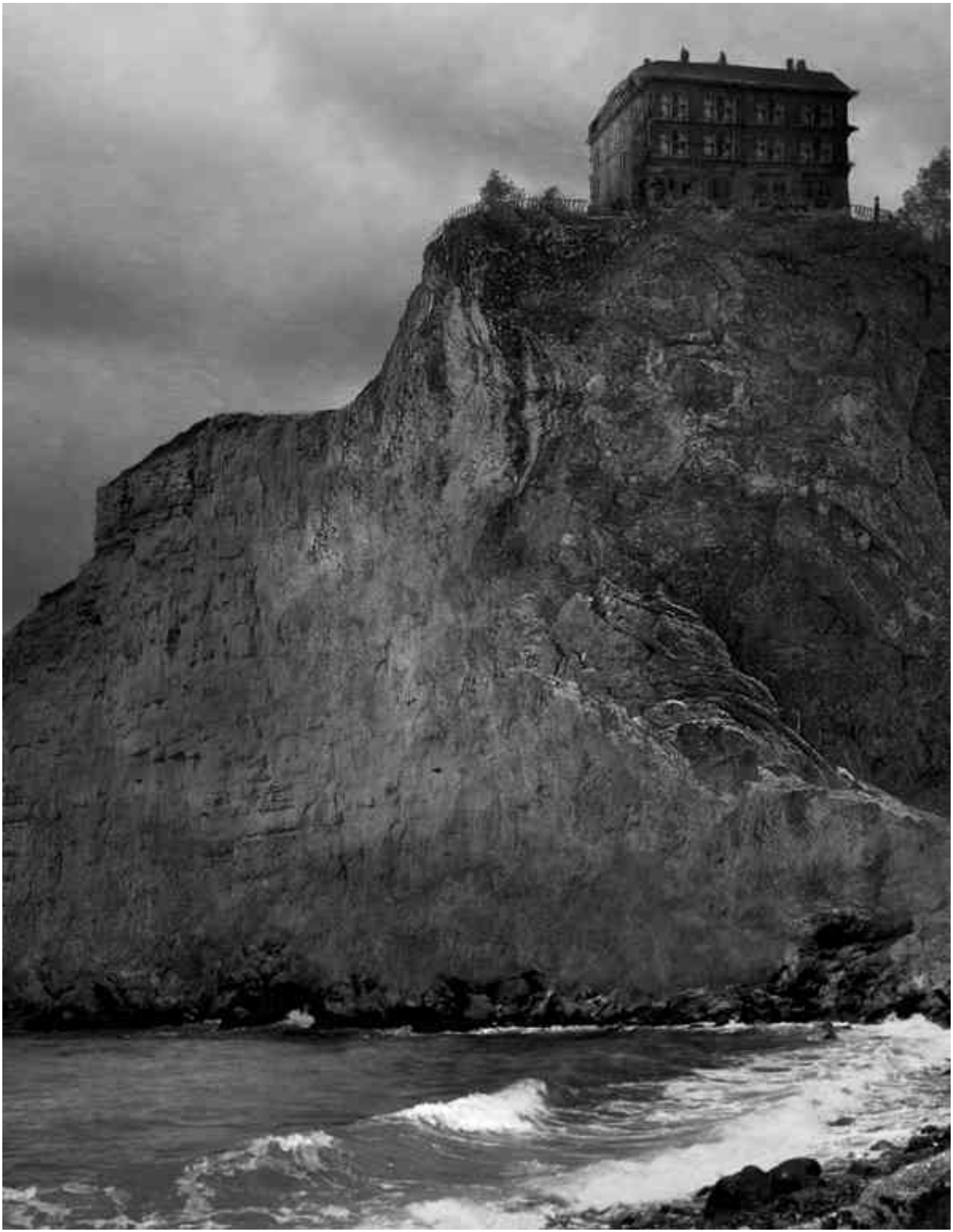

THE DYING OF ST MARGARET'S

Introduction

In The Dying of St Margaret's, there is no escape, no comfort, no salvation when faced with the Mythos. You are powerless and insignificant; your only choices are death, insanity or a quiet life with a shattered mind.

If you are playing this scenario as part of *The Final Revelation* framing sequence, this episode is triggered in the section "Meeting 1: The Friday Group," when the Investigators talk to the patient in Bed 8 at Mueller Hospice.

The Hook

On the remote Scottish island of St Margaret's, the Investigators take jobs at a private school. Each is searching for an acquaintance who disappeared from the school.

The Horrible Truth

Under the school is a Colour, draining the life from the building, its residents and the surrounding island.

The Colour descended to Earth in a well-documented meteor shower in 1914. It ploughed into the sea, coming to rest in a system of caves under the coast, then seeped throughout the caves, drawing strength from the surrounding rock. As the Colour grew older and stronger, it sucked life from a growing area: first, from the cliffs on top of the cave system; then, from the school built on the cliffs. It lay there, undetected, for twenty years.

In 1934, the London occult set became excited about St Margaret's. Their interest coincided with a fervour for the Mythos, fuelled by the anonymous book *The Astronomical Medium* and its tales of ancient beings, unimaginably powerful, falling from the sky. This loose gathering of dilettantes, amateur scientists and lonely gullibles, meeting in their gentleman's clubs and bookshop lectures, became excited. Had a new being come to Earth? Were these meteors more than they seemed?

Some enthusiasts travelled to St Margaret's Island to investigate. They took jobs at the school, working during the day, investigating into the night. Their base was a set workshop under the disused theatre. Naming themselves the "Seekers of Truth," they read ancient manuscripts and legends. One built a strange machine, intended to contain whatever arose from the meteor.

As they researched, explored and pieced together evidence, they realised the meteor was likely embedded in the caves beneath the school. On 14th July of this year, they gathered guns and supplies and entered the caves.

None emerged. Some remain there as dusty corpses, their life drawn out by the Colour. Some retain a semblance of life, lying on the cave floor, staring, their life still draining. The rest are dust, their corpses destroyed by a gust from the sea.

The Spine

The Investigators arrive at St Margaret's School as the academic year begins in September. Two things become clear: something is sapping the life from St Margaret's; and an unnatural shimmering haze is everywhere, seeping into the buildings and hanging over the sea.

The Investigators find the base of the Seekers of Truth—a set workshop, dominated by an infernal machine. The Investigators follow the Seekers to the caves beneath the school, where they encounter the Colour.

The End

Like many Lovecraft stories, this story ends in an anti-climax. The Investigators stand in a cave, surrounded by a Colour, and realise they can do nothing against the Mythos. Perhaps, like many of Lovecraft's protagonists, they return home and go quietly mad.

Note, also, this scenario has no combat. Before playing, ensure your players are on board with this. There is no final fight; no climactic banishing ritual; no promise "you're all going to die." The end is a whimper, not a bang.

Instead, the story is about the Investigators and their Drives. First you describe what drives each Investigator to investigate; later, you raise their expectations; finally, you dash them. As the story ends, the Investigators realise whatever drove them to investigate is meaningless and doomed.

If this is not your idea of fun, tweak this adventure into the Pulp style using the instructions at the end.

A letter to *The Times*

13th May, 1914

Sir – A short time after 11 o'clock last night, a meteor of extraordinary size and brilliancy was seen to shoot down in the south-eastern sky. It passed over the Great Bear, heading in a south-westerly direction, toward Saturn, as it were. Its light was white and of amazing brightness, while its long tail was a fiery red. In appearance it was larger than Mars, that had just risen like a great beacon over the hill top to the right.

Doubtless the wonderful phenomenon has to do with the most extraordinary change that has so suddenly taken place in the weather. While for weeks past it has been of the most boisterous and stormy description, a change occurred overnight, and this morning broke with hard frost, and the day has been of the loveliest sunshine, with a pretty keen high wind prevailing. It will have cheered the hearts of the farmers. – I am, &c.

ALEXANDER SCOTT

The Astronomical Medium

The Astronomical Medium was written in 1853 by an unknown author. It was reprinted in 1931 and gained popularity on the London occult circuit.

"The Author hopes that no reading will so far misunderstand his intention, in the present instance, as to suppose that a train of thought professedly theoretic, or hypothetical, and on a subject connected with which we have no direct information beyond what the Scriptures incidentally convey, is to be allowed to interfere with, or to supersede, any article of our religious belief. That which follows, then, is mere speculation, and if it seems fanciful to the reader, then the Author would be glad for his work to be interpreted merely as a retelling of folktales. This work is submitted, then, First for the reader's enjoyment, and only Second for his enlightenment.

"…Yet we must attempt to understand these proven phenomena, displayed both by theatrical spiritualists and in more scientific studies, and interpret them in the light of our Christian beliefs and of the scientific method. It seems clear that these events are not of this Earth, being unmentioned in the Bible and incomprehensible in terms of our advanced sciences. We are compelled, then, to entertain the conjecture that the spirits, beloved of mediums and spiritualists, are in fact entities from other worlds; and if it seems improbable, considering the astronomical distances, that humankind would be capable of contact with these beings; then we might reference the folktales of Finland, which tell of beings descending from sky to earth in ancient times and resting thereunder. Indeed, such tales are by no means uncommon, for Bavarian legends tell a similar tale."

The Colour at St Margaret's

Hardened *Cthulhu* Keepers realise the problems of designing an adventure around a Colour. At the first mention of "strange colours," the players understand what they are dealing with, and the mystery disappears.

In this adventure, then, there is only one mention of colour: the sunset, as the Investigators arrive, is a "shimmering haze of reds, blues and purples." Thereafter, the Colour is described as a shimmering haze or iridescence. The Investigators might notice, for example, an unnatural haze over the sea or an iridescence seeping into the school's stonework.

To further throw the players off the scent, the St Margaret's Colour is subtly different both from Lovecraft's Colour, described in his story "The Colour Out Of Space," and the Colour described in *Trail of Cthulhu*. It appears gaseous, rather than liquid; it drains life slowly, rather than attacking victims suddenly; its effects are described as "aging," not desiccating or mutating.

All that said, of course, experienced players may well realise the truth about the Colour the first time you mention a meteor. It happens.

But there is another reason for using a different form of Colour. Lovecraft's monsters were deliberately *unknowable*. Changing the Colour's description slightly, deviating from the one with which the players are familiar, reclaims a little of that mystery.

Creating the Investigators

If you are playing *The Dying of St Margaret's* as part of *The Final Revelation,* remember the players should create new Investigators for this scenario. The next section offers suitable sample Investigators.

It is likely the Investigators are members of the London occult set, which is less an organisation than a collection of loose groupings. The occultists meet in gentlemen's clubs, upper rooms of pubs and small bookshops, attending lectures and demonstrations on the occult. The social classes are mixed on these occasions. A tramp might sit in the same room as a gentleman, although it is unlikely they would talk.

Any Investigators who are members of this set are aware of St Margaret's and the astronomical phenomenon in 1914. They likely attended a lecture or read a pamphlet on the subject. They are also aware a group of occultists took jobs at the school to investigate further, but have been out of contact for months.

Ask each player to decide:

- how their Investigator knows the other Investigators.
- the job their Investigator takes at St Margaret's School.
- the person their Investigator is seeking, who disappeared earlier this year.

Those the Investigators seek feature heavily in the story as the "Seekers Of Truth." Some sample Seekers of Truth are given with the sample Investigators. Players may also create their own.

Remember these descriptions and reference them frequently. When this text refers to one of the Seekers of Truth, reference someone the Investigators described. For example, when this text describes a Seeker "breaking in a pair of boots," you might say, "You find your brother's diary. He mentions he was breaking in a pair of boots."

During character creation:

- Cap Health and Stability at 12 and Sanity at 10.
- Cap Credit Rating at 6.
- Reduce General Build points to 50 and Investigative Build points to 16 (for two players), 12 (three players) or 10 (four or more players).
- Because it is unlikely this scenario will be used in a campaign (except as part of *The Final Revelation*), ignore Sources of Stability.

Remind your players this is a combat-free adventure. There is little need for Scuffling, Weapons or Firearms, unless these skills are used on other Investigators. This is not impossible—one might try to restrain another from suicide—but encourage your players to allocate few points to these skills.

The Investigators' Drives are central to this scenario. They are referred to specifically three times:

- As the adventure opens, a predirected scene illustrates each Investigator's Drive.
- Later, a discovery encourages the Investigators' Drives, boosting the Investigators' hopes of fulfilling their ambitions.
- At the end, each Investigator's Drive is proved futile by the discovery of the Colour. Here the rule of Anagnorisis (described in the "Stability, Sanity and Madness" chapter of *Trail of Cthulhu*) may be used.

Hence, be sure each player knows precisely what drives their Investigator to St Margaret's.

Discourage the Drives Bad Luck, In The Blood, Curiosity and Sudden Shock. Because there is little way to undermine these Drives, they do not suit Anagnorisis. The Drives Adventure, Duty and Revenge, although more commonly used in the Pulp mode, work well for this scenario.

The following new Drive, Power, is particularly apt for this adventure.

New Drive: Power

The Mythos is the greatest source of power you know. Surely these rituals, these monsters, can be harnessed for your own ends? Where others have failed, you will succeed, and use this immense power to attain unimaginable authority.

Examples of Drives

The table on the next pages shows how each Drive might progress through the story. Each Drive has these entries:

- A suggested Directed Scene (see sidebar in *The Final Revelation*) to illustrate it. This plays out in the Prologue, below.
- A way the Investigator's discoveries might boost the Drive. This is referenced in the scene "The Workshop," below.
- A way the Drive might be finally undermined. This occurs at the end of the adventure, in "The Cave."

Don't read these examples verbatim to the players! Instead, use them as guides in setting Directed Scenes, and tailor each scene to the Investigator.

Drive	Directed Scene	Drive Boosted	Drive Undermined
Adventure	Your colleagues wave you off from the steps of your Club. In your suitcase is a gun, a map and a pulp adventure novel. Your mind is filled with thoughts of battle and discovery.	As you read the description of the ancient creature, you cannot imagine a finer adventure. A monster, from beyond the stars, with which to do battle!	You stand, surrounded by the Colour, realising the futility of your ambition. There is no excitement, nothing to fight: only the certain knowledge you will end your days in this cave, the life draining from your body.
Antiquarianism	You stand in your room of ancient treasures, breathing in the past. Your eye is drawn to an empty space on a shelf and your thoughts race at the treasure you might discover.	You pore over the documents, growing in excitement as you recognise forgotten languages and drawings of ancient creatures. What prehistoric delights await in the caves below the school?	You stare at the Colour and realise it is too old, too alien, for you to understand. There is nothing to put on that place on the shelf: indeed, you wonder whether you will see your room of treasures again.
Arrogance	You barely attend to the talk in your club, privately thinking the speakers are fools. But perhaps you should not be hard on them: they were not born with your brilliance. Only you will understand this mystery: only you are capable.	You see, in these drawings, something worthy of your talents. Finally you can prove yourself superior, a giant among men.	As the Colour surrounds you, you are suddenly aware how insignificant you are. What hope is there, in the face of such incomprehensible power? What are you, next to this?
Artistic Sensitivity	Reading the *Times* article, images swarm in your head. The natural beauty of the meteor shower alone would be a worthy subject. But the promise of something alien, something prehistoric? That would be a subject incomparable to anything in your career to date.	As you examine the drawings, you are intrigued and excited. If an amateur sketch can produce such intriguing, otherworldly drawings, imagine what you could do!	You stand in the cave, unable to see in the glowing mist. There is no beauty here, no subject for art: only a horror so incomprehensible you could not hope to capture it.
Duty	You cradle your old Army gun. It has been a long time since you felt the call, but now the old feelings are stirring. Another foe to vanquish, another evil to conquer. One more time, for King and Country.	These monsters are worse than you imagined: it is an invasion from beyond the stars. You feel younger, more capable, than you have for years. You know what you must do.	There is no hope. Whether this is a weapon or a sentient being, there is no defence. The Empire is doomed if these are its foes. You feel old. What is there, now, worth fighting for? You, and the Empire, can only wait for your doom.
Ennui	You sink another cocktail, hoping to make the evening pass quicker. What tedious people; how tedious this society. But then you overhear a conversation: an adventure, a journey, something fallen from the sky. Something different, at last. A break from the mundane.	As you watch the others preparing, you smile. An expedition, perhaps a fight. You are excited, you realise: a feeling you have not felt in years.	In the dank cave, you think back to London, and wonder whether you will see it again. Why did you come here? Can you leave? You fear you will spend the rest of your days here, your life ebbing away. For a moment you imagine the taste of a Manhattan, then the moment is gone, replaced with the monotonous reality of the cave.

The Final Revelation

Drive	Directed Scene	Drive Boosted	Drive Undermined
Follower	You pack the last of your belongings. In your life, there is one constant, one purpose, and that is the person you are following. You are off to a remote Scottish island, you understand. There is probably a good reason behind all this.	You prepare to follow into the caves. It's what you do, after all.	You have wasted your life, following someone else, and now your life is about to end. Whether you will die now, or whether your life will ebb away in this cave, you are unsure. But your life proper is over. Perhaps this is what you deserve: you have never sought a life of your own and, now, you have none.
Power	For the first few minutes, the lecture is interesting: something ancient, descended to Earth. Thereafter, you drift into your own thoughts. In something so old, that travels between stars, there must be power. What would it take to harness that power?	This is it. Everything is here: a prehistoric monster of unimaginable strength. Is it only you who thinks of harnessing this power? No matter. It is time to take what is yours.	There is no way to harness this. As you stare, you realise you are in its power, not it in yours. Your mind snaps. You are the thrall of a power you cannot understand.
Revenge	The photograph of your brother sits on your mantelpiece, making you angry every time you glance at it. As you pack the last of your things, you look at it one last time. If the stories are true, a monster has descended from the sky, like the monster that killed your brother. It is time to make things right.	The familiar anger grows: it is a comfort to you. Was this the thing that killed your brother? Or another monster from beyond the stars? No matter. It will be the one that pays for your brother's death.	The anger drains away, replaced by a hopeless bitterness. How can you fight against this? There is no possibility, here, of avenging your brother. You will spend the rest of your life here, you realise, a victim, as your brother was a victim before.
Scholarship	You pick up the morning post: another newssheet from the occult cranks. You subscribe in the hope of something new, but are always disappointed. Before you throw it away, you scan it: and a report on a meteor storm catches your eye. Something, says the newsletter, has fallen from the sky. This is new: a myth with which you are unfamiliar. Perhaps you should go.	Mentally, you are composing the paper that will make your name. A prehistoric creature from beyond the stars. This discovery will echo over centuries: every textbook will include your name.	There are no words to explain this, and if there were, no-one would believe you. In your head, you attempt to compose your paper again, but give up. They would think you mad.
Thirst For Knowledge	You have often stared into the night sky, willing the stars to divulge their secrets. Perhaps they heard! A meteorite, surrounded by rumours of something alien. You must go. You must learn what this is about.	These books excite you beyond belief. They are the gateway to knowledge you did not know existed: a truth from the beginning of time and beyond the stars. You must learn more. You must see this creature.	For the first time, you are faced with something you cannot comprehend. This is not knowledge, only confusion: how can you hope to understand something so ancient, so powerful? Here, facing you, is a truth that underlies everything, and a truth you cannot grasp.

Sample Investigators

[= Occupational ability]*

Alfred Botham

Concept: Bored, middle-aged hack
Drive: Adventure
Occupation: Journalist
Sex: Male

Pillars of Sanity: The truth will out. Live life to the full. We can understand anything if we apply ourselves.

Investigative skills: Library Use 2, Occult Studies 1, Assess Honesty* 2, Flattery* 2, Intimidation 1, Oral History* 2, Reassurance* 2, Streetwise 1, Accounting 1, Credit Rating 2

General skills: Driving 6, Fleeing 10, Health 10, Preparedness 5, Stability 10, Mechanical Repair 5, Sanity 10

Taking the post of: English master
Following: Pip Masterson

You remember when you were young and idealistic. You got your first job, as a cub reporter on the *Maidenhead Recorder,* by pestering the editor with letters. There was nothing in Maidenhead to report on, of course, but that didn't stop you. You trudged the streets, unearthing stories, however minor they seemed. Looking back, you think you were happy, then.

Years later, you are middle-aged, married and the deputy editor of the Hammond High. Although you love your family, they hold you back. It was for them you turned down a post at *The Times*, five years ago, and you find that difficult to forgive.

Two years ago, you employed a kid called Pip Masterson. He reminded you of your young self, walking the streets, looking for stories. One night, he took you to an occultist lecture in a bookshop basement. The lectures proved to be fertile ground for stories: your readers never tired of stories about religious weirdos. You both continued to attend. Then, at the beginning of this year, Pip asked for leave of absence. He told you he was following a lead to the Scottish island of St Margaret's. He was excited: a contact at the Telegraph had shown interest in the story.

Pip never returned. Through contacts in the occult circuit, you know he took a job at St Margaret's school. Taking leave of absence yourself, and telling your family you are going on a fishing expedition, you are setting off to discover the truth.

Reginald Fairweather, MP

Concept: Manipulative politician
Drive: Power
Occupation: Dilettante
Sex: Male

Pillars of Sanity: Some people were born to rule. Knowledge is power.

Investigative skills: Art History* 2, Law* 2, Occult Studies* 2, Theology* 2, Bargain 1, Credit Rating* 5, Flattery* 2, Intimidation 2, Reassurance* 2

General skills: Athletics 10, Driving 5, Filch 5, Health 8, Scuffling 5, Stability 8, Riding 6, Sanity 9

Taking the post of: Divinity master
Following: Dafydd Edwards, MP

You are an ambitious young Tory in the House of Commons. You have few friends, which causes you little regret, but one person who came close was Dafydd Edwards, a socialist, and the Member for somewhere unpronounceable in Wales.

Dafydd was a left-wing old bugger, of course, and his arguments were scarcely worth listening to, but they caused you some diversion. If nothing else, he was less tedious than the other sycophants. He had an interest in history, you remember, and read the most peculiar books. Earlier this year, he disappeared.

Naturally, you searched his desk. After disposing of some oddities—a pack of Tarot cards, for goodness sake!—you found a letter from a school on a Scottish island. It was an appointment letter, offering him the temporary post of Bursar, for a period of six months. Intrigued, you visited one of Dafydd's occult lectures. The more you listened, the more you wondered whether these madmen were on to something. What if there were, indeed, a source of power beneath all the mythological nonsense?

It is now the summer recess and, pleading the need for a holiday, you are travelling to St Margaret's. You have even secured a temporary post at the school, to enable you to dig round a bit more freely.

Georgia Mackey

Concept: Ambitious young scientist
Drive: Scholarship
Occupation: Scientist
Sex: Female

Pillars of Sanity: Equations underpin the universe. Nothing is true unless it is backed by evidence. Hard work is its own reward.

Investigative skills: Geology 2, Library Use* 4, Physics* 4, Astronomy* 2, Cryptography 2, Photography 1, Credit Rating 3

General skills: Fleeing 10, Health 8, Preparedness 5, Stability 8, Electrical Repair* 10, First Aid 5, Mechanical Repair 10, Sanity 10

Taking the post of: Physics teacher
Following: Dr Alfred Grant

It is extraordinarily difficult for a young woman to be taken seriously as a physicist. Perhaps this difficulty encouraged you to take relativity as your field. You would rather be controversial than ignored.

Having graduated at Imperial College, London, you began studying for your doctorate, under Dr Grant. He was one of the few researchers working in the

field of relativity, although it became clear that his aim was to debunk Einstein's work. He was also, clearly, an alcoholic. Nevertheless, you are studying a field you love, and grateful.

At the beginning of this year, Dr Grant announced his intention to take a sabbatical. You invited him for a drink—he never refused a drink—and he explained his intention to travel to a Scottish island. At first he was secretive. Later, he talked about a breakthrough, and a practical experiment on rotating frames of reference. You were surprised and confused. Normally he would be excited about disproving relativistic theory; here, he seemed enthused by evidence to support it. You bought him another drink and, shortly afterward, left him to find his own way home.

He has not returned. You have decided to look for him: the university seem uninterested in your work and will not notice your absence. Rationally, you tell yourself that you are simply looking for your supervisor; but, secretly, you want to find the breakthrough Grant talked about. Is there, indeed, a possibility of testing the relativistic predictions for rotating frames of reference with an experiment?

Vicky "Magpie" Smith

Concept: Tramp who spends her days in the public library
Drive: Duty
Occupation: Hobo
Sex: Female

Pillars of Sanity: There's no good in the upper classes. Knowledge is there for anyone. Death isn't something to be feared.

Investigative skills: Architecture 1, Art History 1, Geology 1, History 1, Library Use 1, Physics 1, Theology 1, Streetwise* 2, Astronomy 1, Chemistry 1, Credit Rating 0

General skills: Athletics* 10, Filch* 10, Health 10, Preparedness 5, Scuffling 6, Stability 10, Conceal 5, Sanity 10

Following: Red

You started going into public libraries because they were warm. As long as you kept your distance from the public, nobody bothered you. Later, you got to like reading. A few years later, you know a little about a lot.

Now, there was this other tramp, Red, an Irish bloke. You saw him in the libraries too, doing the *Times* crossword. He was good, too, almost always finished it. After a while, you made an arrangement, going with him to a different library every day. See, the librarians didn't mind you, but Red couldn't go to the same library too much, on account of them getting complaints from the public about how the crossword was always done.

In the evenings, when the libraries closed, Red had started going to these occult talks. At first you said no when he asked you to come, but he explained that it wasn't a cult, it was occult, and it wouldn't do anyone no harm. So you went with him.

At the start of this year, Red told you he was going to Scotland. How long for, you said. Not long, he said, just going to see about some occult stuff. He told you the name of the island: St Margaret's. But he didn't come back, so now you're going after him. You've got a sense of duty about it. After all, he's one of yours. The working classes have got to stick together. (That sounds familiar. Did you read it somewhere?)

Bob Greene

Concept: Single-minded curate
Drive: Arrogance
Occupation: Clergy
Sex: Male

Pillars of Sanity: God is all-powerful. God loves us. A healthy body is a healthy mind.

Investigative skills: History* 2, Languages* 2, Library Use* 2, Theology* 2, Assess Honesty* 2, Credit Rating 2, Flattery* 4, Oral History 2, Reassurance* 2

General skills: Driving 10, Fleeing 10, Health 10, Stability 10, Firearms 6, Psychoanalysis* 10, Sanity 10

Taking the post of: Under-gardener
Following: Red

You certainly had your doubts when you were sent to St Anne's Church. It was hardly a prestigious post, but the Bishop asked for you, and you could hardly refuse. In an effort to raise your profile, you started a soup kitchen, and talked with the low-lifes.

One of them, you must admit, was rather fascinating, a chap who called himself "Red." He was more receptive than most to the Gospel, particularly the Old Testament, which made him very excited. You grew to like the chap. It became clear he was involved in some rather less savoury religious pursuits: He attended some of the spiritualist talks. Naturally, you warned him about dark forces and so forth, but you couldn't dissuade him.

Toward the start of this year, he disappeared from the kitchen. This was not unusual, of course, and although you rather missed him (mainly because you were forced to talk to some of the duller vagrants), you were not surprised. A week later, a letter arrived, addressed to "Red Smith," care of the church's address. Curiosity got the better of you and you opened it. Red had been appointed as Assistant Gardener, on a school on a remote

Scottish island, and had clearly given the church's address as his home. *Good for him,* you thought.

Red stuck in your mind. A few months later, you wrote to the school, asking after him. The school explained, tersely, that Red had moved on, and expressed some irritation at the post being vacant. You then did something that was either brilliant or foolish. Fresh from a row with the bishop that morning (he had encouraged you to "see a bit of the world"), you wrote back to apply for the post, temporarily, until Christmas. The more you think about it, the more you like it. A few months away from the Church of England; an opportunity to travel; a chance to get your hands dirty. Rather undignified, but again, you like that too; you are growing to like the company of those lower down the social scale.

Perhaps, too, you can find whatever dragged Red to Scotland. You suspect it was related to his occult interests. Still, that doesn't worry you. A few religious nutters? What are they going to do to you?

The Seekers of Truth

These are example Seekers of Truth. Encourage your players to create their own seekers, in addition to these.

Pip Masterson: Ambitious young journalist. A cub reporter on the *Hammond High,* he travelled to St Margaret's on the trail of a story. He hoped this story would buy his way into a post with a national newspaper. While at the school, he took the English master's job.

Dafydd Edwards, MP: An occult enthusiast, although, naturally, he kept that quiet from Parliament. After reading *The Astronomical Medium,* he became fascinated with the incidents at St Margarets. When he heard the post of Bursar was available, he offered to fill in briefly.

Red: A tramp, with a passion for old books and the occult. When the London occultists were talking about the astronomical events at St Margaret's, his main contribution was scouring back issues of *The Times.* He eventually found two letters, which described the meteor shower well. It was also while reading *The Times* he found the post of a Gardener's Assistant advertised at the school. After persuading one of the more literate occultists to write a letter of application, he secured the post.

Dr Alfred Grant: A classical physicist at Imperial College, London. While investigating relativity, with an aim to debunking it, he stumbled across the London occult set. Fascinated by history, he immersed himself in the occult, and began to wonder whether there was more to relativity than he had thought. After the set became fascinated with astronomical events around St Margaret's, he decided to investigate himself, taking the post of Physics master.

Prologue

The ferry from the mainland to St Margaret's runs twice a week. It is the only likely route to St Margaret's, short of an Investigator hiring a boat; certainly, there is nowhere to land a plane.

As the Investigators near St Margaret's Bay, and despite the chill of the evening, the first view of the island is beautiful. It appears unspoilt and peaceful, as the sun sets over the water, in a shimmering haze of reds, purples and yellows.

Along from the bay is a stony beach, at the base of a cliff. The Investigators see the school for the first time, perched on the edge of that cliff—a dark, tired-looking Gothic monolith.

During this introductory scene, describe a flashback for each Investigator—a Directed Scene to illustrate their Drive. (Give the players the two handouts, "A Letter to The Times, 13 May 1914" on page 113 and "The Astronomical Medium—excerpt" on page 114.)

The School

St Margaret's is a private boarding school, accommodating girls between 8 and 13 years of age. Most of these girls are from Southern England, of parents who enjoy the idea of an austere, isolated environment, with no distractions from study. When each term starts, the children are driven up to Scotland, shipped over on the ferry, and educated at the school until the term ends, when they are returned to their parents.

Most residents of the island cannot afford the fees, which generates resentment toward both pupils and staff. There are exceptions, however, and some locals have entered St Margaret's on scholarships.

St Margaret's heyday was in Victorian times, when its mission, to educate young ladies without frivolity, sat well with the zeitgeist. Since the turn of the century, St Margaret's reputation and educational standards have decayed, and the school has become anachronistic.

For clarity, note that the island, the school and the village are all named St Margaret's. In conversation, these are usually referred to as "the island," "the school" and "the village" to avoid confusion. "The village is on the north side of the island. Don't tell them you're from the school."

Cast of Characters

Following are descriptions of the characters on St Margaret's island. After each description are three things that, as Keeper, you can do to physically portray the character at the table.

Bartholomew Althorp, Physics teacher

Bart Althorp is English, bearded and shabby, with leather patches on his unwashed jacket. Although he is thirty, he looks forty. There is a sigh in his voice, which grows stronger when he speaks of the world outside the school.

Bart is to be found in his lab, particularly in the dusty cupboard at the back, where he smokes his pipe and reads pornography. To portray Bart Althorp:

- Slump
- Sigh as you talk
- Shrug

Anthea Davies, Headmistress

Miss Davies is a rotten oak: upstanding, appearing healthy, but rotted from the inside. Her brittle sixty-year-old's body would smash with a careless fall. Her voice is imperious, almost declaiming, and she speaks rather than listens.

The headmistress' study is immaculate, chintzy and soulless. She will entertain visitors, subjecting them to the ritual of tea, but her attention wanders quickly. To portray Miss Davies:

- Talk loudly and imperiously
- Sit straight
- Make small, contained gestures

George Marr, Caretaker

A large man, with a drinker's face, George Marr does not entertain friends. He will converse, particularly with other servants, but rarely refers to his past. He is a reformed petty thief, who has spent time in prison on the mainland.

He is most often found in the kitchen, where he smokes, reads out-of-date newspapers from the mainland and drinks the cooking brandy when the cook leaves the room. To portray George Marr:

- Speak from the back of your throat
- Slur your words slightly
- Keep a deadpan face

Mary Clegg, Cook

Mrs Clegg is overtly friendly, loud and welcoming. Talk to her for more than a minute, though, and you realise the facade; she is beaten, her spirit crushed, using an over-the-top jollity as a cover.

The cook likes to play cards. She prefers to do this in the kitchen, but the stink of George's pipe often drives her to her room. To portray Mrs Clegg:

- Smile at the end of every sentence
- Make expansive gestures
- Affect a singsong voice

Rebecca Mackey, Nurse

Rebecca is fragile and pretty. She talks with enthusiasm of travelling, but has not left the island since she arrived, five years ago. Her company is pleasant, at first, but later stifling, as you sense her desperation to leave.

In the evenings, before the light has fully faded, she walks in the gardens and looks over the sea. She likes to watch the last ferry crossing of the day. Sometimes she walks along the clifftop, to the edge of the school grounds, but never goes further. To portray Nurse Mackey:

- Talk quietly and gently
- Stare into the air as you talk
- Forget what you were saying halfway through a sentence

Andrew McCree, Landlord of the Grey Sailor

Andrew has decayed, handsome looks and thinning hair. A faint air of body odour surrounds him, especially when he moves. This is because he does not bathe after lugging barrels around in the morning. He is suspicious of outsiders and keen to put the upper classes in their place. To portray Andrew McCree:

- Talk deeply and directly
- Look directly into the eyes of the person you are speaking to
- Point, occasionally, at the person you are speaking to

Sarah McCree, Postmistress

Sarah is pretty and portly. An air of dreaminess surrounds her, as if she is unused to speaking to people. To portray Sarah:

- As you talk, look at the table from time to time, speaking at it
- Speak slowly and breathily
- Smile to yourself

Arrival at the School

The Investigators are met at the dock by Bartholomew Althorp, the Physics teacher, bearded and shabbily dressed. He waits by a car, which belongs to the school.

He shakes the hands of any Investigators of **Credit Rating** 3 or higher and introduces himself. Any Investigators of lower social standing are asked to load the luggage into the car.

The car can hold three passengers comfortably, or four uncomfortably; those of lower **Credit Rating** are expected to walk if there is insufficient room. Bart drives to the school, up a winding road to the clifftop. He asks, with moderate interest, how the Investigators found their journey and what posts they will fill at the school. He gets out of the car to open the school gates, before parking on the gravel in front of the school.

It is now 5.30pm. Where the Investigators go now depends on their Credit Rating and, perhaps, on the post they are filling.

Credit Rating 6: Bart deferentially delivers an invitation, from the Headmistress, to pre-dinner drinks. He shows the Investigator to the Headmistress' study.

The Headmistress is working at her desk, but expecting any Investigators whose social standing is this high. She offers them tea, of which she has a pot ready, or sherry. She asks the same questions as did Bart, about the journey and the post the Investigator will fill, and makes small talk about the school; the children are unexpectedly pleasant and the weather is expectedly unpleasant. At 6.30pm, she conducts the Investigator to High Tea.

Credit Rating 4 or higher: Bart asks the Investigators to find their rooms, which are in the Staff Wing, clearly signposted and labelled by name. He promises their luggage will be brought to them and tells them that High Tea is in the Dining Hall at 6.30pm. Investigators of this Credit Rating are likely taking teaching posts; if their posts are more menial, Bart looks surprised but gives them the same directions.

When the Investigators find their rooms, they prove small but adequate, each with an Investigator's name on the door and the key in the lock. The furniture and floorboards are wooden and creaky, and there is a view of the darkening, misty sea. If the Investigators wish to wash before dinner, a shared bathroom is at the end of the corridor.

Credit Rating 3: If the Investigator is filling a teacher's post, Bart will give them the directions for those of **Credit Rating** 4 or higher, above, reminding them to dress appropriately for High Tea. Otherwise, he will give them the directions for **Credit Rating** 2 or lower, below.

Credit Rating 2 or lower: Bart asks the Investigator to carry luggage to the Staff Wing, then report downstairs to the caretaker. These Investigators eat downstairs and, although they may serve at High Tea, will not dine.

If any Investigator of this social class is expecting to take a teaching post, Bart looks surprised and gives them the same directions. Later, the Investigator receive a message there has been a mistake, and they are asked to assist the caretaker rather than teach.

Below stairs, the Investigators find the servants eating fish soup. The cook, Mrs Clegg, offers some. George Marr, the caretaker, introduces himself gruffly. If the Investigators are taking up serving posts, they are asked to help serve at High Tea; if janitorial posts, they are also asked to help serve, while Mr Marr remarks, "We all muck in here." If they are gardening, they are given a key to the gardener's cottage.

High Tea and Afterward

High Tea is the main evening meal. The teachers sit at High Table, oriented horizontally at the head of the room and raised on a platform. The lower tables are reserved for pupils. They run for the length of the room, perpendicular to High Table, with benches as seating.

Staff and pupils are expected to be in their places by 6.20pm; anything else is "late" and will be remarked upon. The headmistress enters at 6.30pm, accompanied by any Investigators with **Credit Rating** 6. All pupils and staff stand at her entrance. After she says Grace, they sit.

The food tonight is cod, blandly cooked in milk. It is edible without being pleasant. It is accompanied on High Table by wine, which is excellent.

This, for the Investigators, is the first real opportunity for conversation with the staff.

After dinner, the teaching staff repair to the common room for coffee. Thereafter, some play bridge, while some retire to their rooms. Below stairs, the servants wash the dishes, then drink whisky and play various raucous gambling games.

Staying at the School

The Investigators likely stay a while at the school, while they uncover the mystery.

Pupils and staff rise at 7am. After washing and dressing, they take breakfast—pupils in the Dining Hall, staff in the Common Room. As is the British tradition, they serve themselves congealing food and lukewarm tea from a sideboard.

The Investigators' Daily Routine

Teaching begins at 9am. Investigators who are teachers are expected to start teaching the morning after their arrival. There being no formal curriculum, they are simply expected to impart "the basics" to their pupils. Teaching gives excellent opportunities to search cupboards (which might reveal clues 3 and 4, below) and, between lessons, to talk in the staff room (which might reveal clue 1).

If the Investigators are assisting the caretaker, they spend their days with him, lugging boxes and fixing locks. If they have posts within the kitchen, they peel potatoes and gut fish. If they are assisting in the garden, they dig over flower beds. Again, opportunities for searching and conversing abound.

At midday, staff and pupils take lunch in the Dining Hall. The meal is lighter and less formal than High Tea. The headmistress takes lunch in her study.

Teaching continues from 1pm until 5pm. This is continuous for pupils, although staff find themselves with the occasional "free period"—an hour when no lessons are scheduled, during which they may amuse themselves. Most staff go to the staff room and drink tea for an hour.

High Tea is at 6.30pm, after which everyone amuses themselves, as best they can, for the evening. The pupils go to bed at 9pm, a time known as "Lights out," and staff generally retire around 11pm.

Clues

The following free-floating clues are available at any time during the Investigators' time in the school. Examples show how certain skills might reveal clues. Again, as Keeper, you should allow *any* plausibly used skill to reveal a clue.

Note that the skill of **Streetwise** is used to relate to the servants. Anyone at home in an underground drinking den will fit in below stairs.

1. The residents are lacking in motivation; they all express a wish to leave, but have been there for years.

- **Bureaucracy:** The staff records show that teachers remain at the school much longer than is average for the profession. Nevertheless, the memoranda from staff often express a wish to leave.
- **Streetwise:** The gardener takes your cigarette. He says that St Margaret's makes him feel old

Talking Posh and Talking Rough

In a setting obsessed with class, it is only a matter of time before someone *pretends* to be a different Credit Rating. Perhaps a labourer puts on a suit and tries to talk posh; perhaps an upper-class clergyman dresses down and talks rough.

The skill to use here is **Disguise**. Ask for a roll against a Difficulty Number of 4 plus the *difference* in **Credit Rating.** For example, for a labourer (**Credit Rating** 2) to pretend to be a middle-class teacher (**Credit Rating** 4), the Difficulty Number would be 6. Equally, a well-bred vicar (**Credit Rating** 5) attempting to slum it as a gardener (**Credit Rating** 2) would face Difficulty Number 7.

The roll should be repeated for each new social situation (for example, at High Tea and while teaching), but after three successful rolls, assume the impersonation is completely successful and requires no further rolls.

beyond his years, and although he often makes plans to leave, he never follows them through.

- **Flattery:** Bart thanks you for your compliment. He says he used to have great ambitions, but these drained away at St Margaret's. He wonders about leaving, but never does.
- **Psychoanalysis** (used as an Investigation Skill): Something is wrong with these people. They are undermotivated and socially unresponsive.

2. The school and its surroundings are aging at an unnatural rate.

- **Architecture**: The school has suffered more damage than you would expect for a Victorian building; it looks 500 years old rather than 50. Nevertheless, it is clearly built in the Victorian Gothic style.
- **Occult:** Looking at the school, you imagine a dark aura, as if the building were dying, almost as if it was in pain. This building is growing old quickly, you realise, more quickly than is natural.
- **Art History:** Although the portraits on the staircase are clearly Victorian, the state of the canvas and the paint is unnaturally aged. You would expect to see this degree of decay on medieval paintings.

3. The people the Investigators were following spent much time together. They called themselves The Seekers of Truth.

- **Credit Rating:** The headmistress remembers the group. They always hung about together and had a ridiculous name for themselves: the "Seekers of Truth."
- **Oral History:** Oh, yes, Mrs Clegg remembers them well. One night, she overheard two of them talking in the quadrangle. They said they were going to meet the other "Seekers". She wondered what they meant, but later found they called themselves the "Seekers of Truth"! Imagine that!
- **Reassurance:** The headmistress looks worried. The group always worried her. They hung about together and called themselves the "Seekers of Truth."

4. The Seekers of Truth had strange interests, in obscure science and mythology.

- **Physics:** You come across an examination paper, set by one of the Seekers of Truth. Oddly, there is a question about Special Relativity. Relativity is a controversial subject, only slightly more than a fringe belief. No Physics teacher would have taught it as fact.
- **History:** You come across an examination paper, set by one of the Seekers of Truth. You are surprised by its contents. Two questions do not concern history, but obscure, and bizarre, myths about world creation.
- **Reassurance:** Once Mrs Clegg calms down, she tells you she saw one of the teachers with a strange book. When she asked what it was, he showed her. It was strange and decidedly un-Christian, with drawings of monsters and strange writing. She avoided him after that.

5. The Seekers of Truth disappeared, all at once, on the evening of 14th July.

- **Bureaucracy:** Looking back at the archive files, there are letters regarding a group, who called themselves the "Seekers of Truth," who disappeared on 14th July.
- **Credit Rating:** The headmistress looks angry. Yes, she remembers that day very well. They all disappeared one evening, without any explanation, and she was asked to cover teaching duties. It was the 14th July, she thinks. They were Physics lessons, too! How can she be expected to know about Physics?

6. Core Clue: There are many sickly children, who are taken to the Sanatorium.

- **Medicine:** For some reason, the Dining Hall reminds you of your waiting room, from your days in General Practice. You soon realise why: many of these children appear pale and ill. You would normally blame the diet, but the food seems perfectly adequate. On asking, you find that sick children are taken to the Sanatorium.
- **Bureaucracy:** There is an unexpectedly high level of sickness absence, both in staff and pupils. Looking at school procedures, you assume that sick children are taken to the Sanatorium.
- **Assess Honesty:** When Bart Althorp talks about the academic results, you sense he is telling the truth. However, when he talks about sports, he seems to be lying; and his sudden statement that "the pupils are healthy and happy" is a barefaced lie. You think he mentioned, once, the Sanatorium is full at the moment.

7. Core Clue: The personal effects of the Seekers of Truth are in the attic.

- **Reassurance:** Rebecca smiles at you. "I found them creepy," she says. "When they disappeared, they collected their stuff into boxes and put it in the attic. I was glad."
- **Credit Rating:** "Damn it, man," you bark at the caretaker, "if I ask you a question, I expect you to answer. Where are their effects?" He stares at you. "In the attic, sir," he says politely and coldly.
- **Architecture:** Where would their personal belongings be? There must be a storage space, somewhere in the building, but you have not seen it. The answer comes to you as you walk among the buildings: there are high spaces under the eaves. Perhaps there is an attic, where the Seeker's belongings were kept.

Antagonist Reaction: The Colour

Each night an Investigator stays in the school, they lose one point of Stability. It takes a 2-point Stability roll to leave St Margaret's Island, but the difficulty of this increases by one point for each night spent in the school.

The Investigators notice, as they look out over the sea, the same shimmering haze they saw from the boat, hanging over the water.

The following events are not Clues, but flesh out the pervasiveness of the Colour. At appropriate moments, ask an Investigator to make a **Sense Trouble** roll with a Difficulty Number of 4. If they succeed, tell them one of the following. All these events require Stability tests, although none are Mythos-related shocks.

- Looking at the building, you notice an iridescence. It reminds you of the shimmering haze you saw, at sunset, from the boat. Your eye follows the haze from the sea to the building. It seems to you the haze has seeped into the building and the surrounding rock.

2

- You watch the sunset, noting the same shimmering, sunlit haze you saw from the boat. Hours later, you notice the haze still shimmering. There is no moon, no source of light, no reason for the haze to shimmer. It now seems unnatural, hanging over the sea.

3

- You wake. There is something in the room. Gradually, you perceive the same shimmering haze you saw from the boat. It is here. It is everywhere—in the land, in your room, in the bricks of the school. You breathe deeply, then realise it is in your lungs. It is inescapable.

4

The San

The Sanatorium is a small, single-storey outbuilding, overlooking the playing field. By contrast with the imposing nature of the school, it seems pleasant and tranquil, and even has a small garden, although the plants are hardy bushes rather than flowers. Birdsong hangs in the air.

There is always one staff member on duty. During the day, it is Nurse Mackey, a young and bookish girl from St Margaret's village. At night, one of the teaching staff is assigned to San duty, which is dull but undemanding. Most bring a book, a crossword or a half-bottle of whisky.

The main room of the San has eight single beds, all currently occupied. Nurse Mackey's office is small and contains unsophisticated medical equipment, suited to little more than first aid, as well as the pupils' medical records. There are two large jugs: one of white fluid that tastes of chalk; the other of brown fluid, tasting strongly and unpleasantly of vegetables. Pupils are given a glass of each a day, until they recover; this deters malingerers.

Despite her quiet manner, Nurse Mackey is distraught. She expected this job to be pleasant and unchallenging. Instead, she is appalled at the number of broken bones. Because she cannot set a bone, pupils are taken to the mainland on the ferry for treatment, before returning to the Sanatorium to recover. Secretly she worries someone will think she is harming the pupils (she is not) or incompetent (she is).

Once a week, Dr Bryson visits from St Margaret's Village. Although he realizes something is wrong, he prefers to keep his mouth shut and do the minimum necessary to help pupils recover.

Clues

1. Many children in the sanatorium suffer from arthritis and osteoporosis, which is extremely unusual.

- **Medicine**: Many children complain of pains in their hands and ankles. Although the medical records describe these merely as "pains," you suspect arthritis, which is astonishingly unusual for children this age. There is a high incidence of broken bones, from incidents as simple as tripping and falling. This leads you to wonder about osteoporosis.

2. Heart rates and blood pressure seem universally lower than usual.

- **Medicine:** You examine the children and are surprised by lower heart rates and blood pressure than is usual. Checking the records, you find these lower rates repeated across almost all pupils. The only exceptions are those new to the school; indeed, looking at the records for newly arrived pupils, their heart rates and blood pressure seem to be normal on arrival and decrease as they spend time in the school.
- **Flattery:** You talk at length to Nurse Mackey. It is odd, she says, but the heart rates of the children seem lower than is normal, as does their blood pressure. For the blood pressure, she wondered about faulty equipment, but there is no explanation for the heart rate.

The Attic

The attic is easily located at the top of the main staircase. Although the staircase is heavily used, the final flight to the attic is not. It is locked and the caretaker holds the key, although it would not be difficult to break the lock.

However, entering the attic is odd behavior, especially for teachers. It is likely to draw attention and suspicion of thievery. Searching the effects of former teachers, without a good explanation, looks even worse.

Hence, for Investigators with Credit Rating 3 or higher, going to the attic unobserved is difficult. Investigators wishing to search the attic alone may spend a point of an appropriate skill (perhaps Flattery, Intimidation or Reassurance). Without this benefit, someone follows them up, offers to help or call a servant, and reports the matter to the headmistress later.

Investigators with Credit Ratings lower than 3 need only make a plausible excuse to the caretaker. If observed, people assume they are fetching a box.

The attic is vast. Near the entrance, stacked in neat rows, are trunks of pupils currently resident at the school. Against the north wall, in boxes and filing cabinets, are archived school records. In the northeastern corner is a disorganized heap. Here, buried beneath broken furniture and other junk, the Investigators find the effects of the Seekers of Truth, in crates labeled with the Seekers' names.

It takes hours of solid work to sort through the crates fully. They contain clothing and trinkets, with some personal diaries and letters.

Clues

1. The documents are incomplete. Some, such as those relating to July of this year, have been removed.

- **Library Use:** There are references to other documents, which, after much searching, you determine are not present. There are also gaps in the dates of the letters. For example, many letters were sent on a weekly basis, but they stop around mid-May without any explanation.
- **Evidence Collection:** You notice that a set of diaries suddenly stop at the beginning of May. You have a hunch that there is a batch of documents that are missing from this collection.

2. There is a sense of preparation and excitement before 14th July, as if the Seekers were going on a journey. There are no records after that date.

- **Accounting:** Reading through an accounts book, you notice a great deal of expenditure on equipment such as cooking stoves and ropes, in May and June of this year.
- **Outdoorsman:** One of the Seekers of Truth, in a diary, mentions that he was "breaking in" a pair of boots. Along with other references, you wonder whether he

was intending to take a journey—perhaps on 14th July, when all the records stop.

- **Library Use:** One constant you notice, as you correlate the various correspondence, is a sense of excitement and adventure, which peaked just before they disappeared in July.

3. Anything you might take on a journey, particularly a dangerous journey, is missing.

- **Evidence Collection:** You notice that, in all the personal effects, there is no overcoat, nor a sturdy pair of shoes. You sense that everything you would need on a journey has been removed.
- **Outdoorsman:** These personal effects remind you of the things you leave at home when you go somewhere. There's no overcoat, for example, and few winter clothes. These people went on a journey; this is the stuff they left behind.
- **Credit Rating:** Your suspicions are aroused by the lack of a gun. If a gentleman disappeared, why would his gun not be in his room? The answer is clear to you—he took the gun and he was going somewhere.

4. Core Clue: Sarah McCree, who left her post as school secretary at the end of July, and who now lives in St Margaret's Village, knew the Seekers well.

- **Evidence Collection:** A paragraph in one of the letters catches your attention, in which one of the Seekers mentions leaving "everything with Sarah". Sarah, it appears from the letters, is the former school secretary, who left the school two months ago. She now works in St Margaret's Village.
- **Library Use:** Although locals are mentioned from time to time, you are struck by the number of times the name "Sarah McCree" is mentioned. One letter identifies Sarah as the former secretary of the school. It states she left earlier this year to work in St Margaret's Village.

The Grey Sailor

Sarah McCree, formerly the school secretary, is now the postmistress on St Margaret's Island. Her Post Office is part of the pub, the Grey Sailor, in St Margaret's Village.

The pub itself is a working-class haunt, shabby and pleasant. The landlord is Andrew McCree, a large, smelly and

pleasant fifty-year-old, who is Sarah's husband. He inherited the pub from his father, William, who died fifteen years ago. Andrew is friendly to his friends, but guarded with outsiders.

The Grey Sailor opens at 3pm and fills quickly as sailors return from fishing, then empties at 5pm, as they return to their houses to eat. Afterward, it is largely empty, save for servants from the school, who are welcome; and teachers, who are tolerated.

As outsiders and strangers, the Investigators are treated with suspicion. If they have **Credit Rating** 4 or higher, their welcome is particularly frosty, although McCree serves them.

Sarah herself is normally in the bar area from 3pm to 6pm. After that, she is upstairs; Andrew McCree calls her down, if asked, and this makes her suspicious and irritated. Andrew, or the locals, can also answer the Investigators' questions.

Sarah was given various sentimental items by the Seekers of Truth: wedding rings, photographs, hip flasks. None of these items give useful information, but they may be of interest to Investigators searching for loved ones. Any appropriate skill (**Reassurance, Intimidation**) allows the Investigators to view the items. To take items away requires another point of an appropriate skill, per item.

Male Investigators must buy a pint of beer before Andrew or Sarah talk to them (except, perhaps, if Intimidation is used). Female Investigators, in this male-dominated environment, surprise the pub regulars, and are not required to buy a drink.

Clues

1. Sarah worked at the school, suffering various illnesses and injuries, which stopped when she left.

- **Reassurance:** Sarah smiles. "Well, everyone in the village knows. That place made me ill. I kept breaking bones and catching diseases. Then Andrew took me out of the school and I was fine."
- **Credit Rating:** You order one of the locals to tell you what's going on. Hearing your voice, he sits upright. "All right, Mister. Sarah was always ill, at school. That's why Andrew took her out of the school. She got back to the village and suddenly she was healthy. Still is. Go and ask her."

2. Sarah knew one of the Seekers of Truth. He talked of strange mythologies and crackpoint science. He said he was planning "a great adventure" or "a great discovery" on 14th July. He left that day. She didn't see him again.

- **Oral History:** You buy one of the locals a drink. "That gentleman Sarah used to hang about with, one of the teachers. Always talking about crazy things, dead stars and monsters. He said he was going on an adventure, sounded excited. That was back in July. We never saw him again. Good riddance, I say."

3. Core Clue: The Seekers Of Truth met somewhere underneath the old school theatre.

- **Intimidation:** Andrew takes a step back. "All right. Go and look under the old theatre, in the school. That's where they met, that crowd. Now get out and don't bother Sarah again."
- **Flattery:** Sarah looks suspicious, then relaxes. "One of the teachers used to say things like that," Sarah says. "I used to see him hanging about near the old school theatre. I think they used to meet somewhere under it."

The Workshop

The old theatre, now disused, is built into the side of a hill, at the back of the playing fields. Since it was built in mid-Victorian times, the trees have crept forward, so that, although they do not engulf the theatre, they effectively camouflage it.

There are three doors: the main door, leading to the auditorium past a tiny box-office window; the stage door, along one side of the building, leading to the dressing rooms; and the set workshop door, hidden among the trees.

(Take a moment, at this point, to consider what the Investigators *should* be doing, rather than breaking into a theatre. Teachers should be teaching during the day; janitorial staff and servants have duties to perform. How have they explained their absence?)

Neither the stage door nor main doors are difficult to force. Alternatively, the caretaker has a key. Again, a point spend of an appropriate skill (**Locksmith** to open a lock cleanly, **Reassurance** to ask for the key discreetly) ensures the Investigators enter undetected; without this spend, they face hard questions from the headmistress later. By this stage, of course, they may not care.

The auditorium itself, although small, was clearly once luxurious. One hundred red seats, now reeking

of damp, face a stage set for a final performance of Cinderella. The dressing rooms are unremarkable.

The set workshop is below the main stage. It may be reached in three ways: through a small door in the changing rooms; through the overgrown door at the back of the theatre; and, most interestingly, through a trapdoor in the stage, via a ladder. The investigators will need to light the workshop; there is no electric light here.

Once lit, the workshop appears cavernous and cluttered. Against the walls are desks, piled with papers, tools and old books. Impromptu bookshelves, made with bricks and planks of wood, are loaded with more books.

This workshop contains all documents missing from the crates in the attic. It will take days to search and collate all the information.

The Machine

In the centre of the room is a strange machine. Its most noticeable feature is a fifteen-foot long iron arm, attached to a central pivot. Attached to the central pivot is a flywheel; and attached to the flywheel are long, thick cables, connected to a petrol-powered generator in one corner of the workshop.

The arm looks intended to revolve horizontally and, indeed, a circular space, thirty feet across, has been cleared around the machine. Across this space, spirit levels are placed, screwed firmly to the floor. The machine is, of course, immobile in any practical sense; the flywheel is extraordinarily heavy, the generator is large and the arm is fifteen feet long.

The Investigators may start the machine. To do so, they must start the generator. This involves scraping rust and forcing a lever down.

As the machine starts, the arm begins to revolve, first slowly, then gathering speed. Over several minutes, the arm begins to revolve faster. The bubbles in the spirit levels tremble, as if the floor is moving; however, the floor remains still.

Gradually, the arm becomes a blur, scything lethally around the circle at unnatural speeds. The displaced air sends loose papers flying, where they hang, twisting in eddies in the rushing air. The bubbles in the spirit levels creep toward the outer edges, indicating that the floor is tipping, as if pulled downwards in the centre. To the eyes, the floor remains flat.

It is clear, especially to scientists, the generator is no longer powering the machine. No earthly power could produce this speed.

Suddenly, one spirit level breaks, its liquid instantly sucked toward the centre. The others, although clearly horizontal, indicate they are vertical. The centre of the machine is no longer visible, but sucks loose papers from the air toward it.

Any Investigators witnessing this must make a 2-point Stability test. Any scientist understands, especially from the spirit levels, this is impossible and unnatural, and must make a 3-point Stability test. These scientists cannot suppress the thought they are witnessing a portal between worlds.

2/3

The Investigators may try to stop the machine. Disconnecting the generator works. So will pushing furniture into the path of the arm—the first piece of furniture splinters and is sucked into the centre, but slows the machine; further furniture eventually stops the rotation entirely. The machine will take minutes to stop, but, as the speed reduces, the spirit levels return to normal and the centre of the machine becomes visible.

Engaging the machine physically is foolish and to be encouraged. Treat this as combat, using the following statistics: Health 20, **Scuffling** 20, Hit Threshold 3, immune to bullets.

Entering the portal is equally foolish. The portal is at the same location as the hub of the machine, which means anyone entering must avoid the rotating arm. If an Investigator gives a plausible explanation how they can do this, allow them to enter the portal. They disappear (and leave the scenario).

When the machine stops, anything that was sucked into the centre is gone.

The Desks

Each Seeker of Truth has a specified work area within the workshop.

Here are example descriptions of the work areas. As Keeper, tailor these descriptions to the players' initial descriptions of the Seekers they are following. For example, you might say, "This must be your brother's table; his handwriting is in the margins of the books. The books are myths of world creation, translated from Finnish and German. One of them is a picture book, of folk monsters. It shows a diabolical creature, like a sea-monster, but against a background of stars."

An engineer's desk: This untidy desk is covered with sketches of machines. There is a slide rule, a set square and protractor, with three thick books on

Mechanical Engineering. A small model of the machine in the centre of the room is buried under a pile of paper.

A physicist's desk: This desk is merely a resting place for books. Many are on conventional physics, but it looks as though the author had a special interest in relativity. There are letters to a physicist in Austria, and scribbled relativistic calculations, related to rotating frames of reference.

"Calculating in a rotating frame of reference, we see the standard results, and note singularity at centre (division by zero!). Contrast with graph for a black hole.[1] But now treat singularity as source of mass, linearly increasing and note that speed of rotation increases without limit. Suggestion of miniature black hole albeit contained in field of rotating body. Now consider conjecture of star = spacetime gate (anecdotally supported, although not experimentally, of course) and we may be looking at way to manufacture a portal. Pure conjecture, of course. Nevertheless interesting."

An astronomer's desk: Neatly stacked maps and star charts line this desk. In the centre is a precise drawing, showing something falling from the sky. Oddly, amongst the maps, is a book of prehistoric legends of world-creation.

A historian's desk: Here, the books are not those you would expect of an academic historian. They often concern prehistoric myths of world creation. There is a sketch of a creature. At first you think it is a jellyfish, but then you realise it is something alien and monstrous.

1 The anachronistic term "black hole" is used here to clarify the players' understanding. The term originated in the 1960s. Keepers seeking authenticity may use the terms "dead star" or "frozen star."

Think of the Children

Altruistic Investigators may want to save the people in the school, perhaps by evacuating the children.

This is not impossible. They likely need to persuade the Headmistress, who requires tangible evidence of danger (perhaps medical evidence, gathered from the San), together with a two-point spend of an appropriate skill, such as Credit Rating or Intimidation.

Any other altruistic gestures, such as sneaking the children out without informing the staff, are left to your discretion as Keeper.

An occultist's desk: You have heard of these texts, but not seen them: myths of world creation, translated from Finnish and German. One book is a picture book, of folk monsters. It shows a diabolical creature, like a sea-monster, but against a background of stars.

A linguist's desk: The owner of this desk was translating a text. It is a book of Finnish folk-myths, mainly world creation myths, although strange glyphs are printed in the margins. In the centre of the book are colour illustrations of creatures—sea monsters, perhaps, or aliens?

Tomes

The Seekers of Truth ordered occult tomes and books of prehistoric myths through the school library. Judging from the books here, there was little scrutiny of what was ordered, although there is bias toward children's literature, books in foreign languages and histories, suggesting that the Seekers were ready, if necessary, to defend the books as "educational."

This workshop, then, is crammed with books and notes. Treat everything written within the Workshop as a Tome (as detailed in *Trail of Cthulhu*). Gaining a clue by poring over *anything* written adds 1 to **Cthulhu Mythos.**

The following two books, in particular, are found in the workshop. If the Investigators are fluent, or choose to be fluent, in Finnish or German, the books will be found in their original languages. Otherwise, they are found in translation.

Die Jungewelt (translated as "When The World Was Young"), by Gustav Brandauer

Published in the original German in 1836, this educational textbook details world creation myths. The familiar Christian and Nordic creation myths appear here, followed by a descriptive account of a Bavarian story of ancient creatures, falling to Earth, and remaining buried to this day. The margin scribblings, in two unknown hands, expand on this last myth. The original German version adds 2 to **Cthulhu Mythos**; the translation adds a single point.

Untitled (translated as "Creatures From Space"), author unknown

The original Finnish book accompanies illustrations of monsters with intricate and beautiful poetry. It has no cover, so the original title, author and date of publication are unknown. Reading the haunting poetry, with its descriptions of Star Vampires, Old Ones and a Colour, adds 2 to **Cthulhu Mythos.**

The translation, "Creatures From Space," is an ill-advised late Victorian attempt to popularise the original for children. The original illustrations remain and, in this version, are the main source of information. The poetry is translated as doggerel, retaining a little of its original meaning. Read by itself, it adds nothing to **Cthulhu Mythos**; viewing the illustrations while reading similar books adds a single point of **Cthulhu Mythos.**

Clues

1. The Seekers were investigating occult myths, about gods that "fell from the sky when the Earth was young." Many of these writings seem insane.

- **Library Use:** Looking at your brother's books, you see he had moved beyond history, into world creation myths. Many of them seem insane. In the margins, he has scrawled the phrase "They fell from the sky when the Earth was young," over and over again.
- **Linguistics:** This is a more ancient form of the language than you are used to. There are chants about beings falling from the sky, although you cannot tell whether the beings are monsters or gods. The incantation "They fell from the sky when the Earth was young" is repeated.

2. The Seekers believed one of these gods fell to Earth in the meteor storm.

- **Astronomy:** On the professor's desk are detailed plots of trajectories, showing a meteor falling from the sky. You are surprised by some of the notes in the log book. It looks as though the professor assumed the meteor was an alien, perhaps a god.
- **History:** There are eyewitness reports of meteor storms, dating back as far as the 15th Century, cross-referenced with world creation myths. You realise the Seekers thought the meteor storm was a god coming to earth.

3. In later writings, the Seekers sometimes refer to themselves as the Order of Truth, sometimes in Latin: *Ordo Veritatis.*

4. The machine is intended to contain a creature or, perhaps, banish it to another plane. There are specific references to other planes: "Dream," the "Dark Outside."

- **Physics:** The scribbled relativistic equations remind you of similar equations you've seen for frozen stars. Many of the proofs are strange—there is a division by zero—but you gradually realise the machine is intended as a portal, perhaps to contain a large creature, perhaps to banish it to another plane.
- **Occult:** There are symbols inscribed on the machine, which you have seen before in a summoning ritual. Clearly, the intention to to open a portal, but you are confused by a glyph that could represent 'Contain' or 'Banish.' Was this machine intended to imprison a creature?

5. There are sketches and descriptions of things from beyond the stars: a vampire that leaves its victims desiccated; a vapour that lies under the Earth, drawing power until it is mature; an idiot god at the centre of the universe.

2

- **Evidence Collection:** Once you clear the desk, you notice strange drawings, carved into the wood. They are detailed. One shows a vampire-like creature amongst the stars; another a vapour, under the soil, drawing something into it; a third shows the universe, with something alien at the centre.
- **Occult:** You recognise some of the myths, although they are described in horrific and detailed terms. A vampire floats between the stars, sucking the life out of its victims. An alien gas lies under the soil, gaining its power from the life above. An idiot god writhes at the centre of the universe.

6. Core Clue: On 14th July, the Seekers went to the bay where a meteor landed.

- **Library Use:** The final entry in one of the diaries is excited: "Now we will see what the meteor really is! Will we meet a god? Will we die? We will make the bay uncover its mysteries!"
- **Astronomy:** One of the trajectories shows the meteor falling into the bay. Next to the location is written 'Tuesday.' You conjecture that, on 14th July, the Seekers went to the bay, to investigate the meteor.

Interlude—Drives

At this point, remind the Investigators of their Drives. This workshop holds the promise of finding a buried god.

Take a moment to focus on each Investigator before proceeding, perhaps as a Directed Scene. Encourage each player to describe their excitement. Within hours, this discovery will give the Investigator everything they ever wanted. What do they imagine? How do they feel? What do they do?

The Bay

A stone staircase leads from the school to a rocky beach. This beach, half a mile long, runs the length of the bay, at the base of cliffs. It is not a pleasant place; the stones feel oily and the water is cold.

This is a short scene. It serves two purposes. First, it is the calm before the storm, a moment for the Investigators to prepare, gather their thoughts and have any final conversations. Second, it lets the players see the Colour again. After machines, trajectories and prehistoric myths, it is time to remind the Investigators of the shimmering haze.

Clues

1. The shimmering haze is everywhere, sucking the life from everything it touches.

2

- **Geology:** The rocks are iridescent and oddly crumbling. It is a strange iridescence, stronger than you have ever encountered. Then, as you look around, you seem the same iridescence everywhere: in the cliffs, the stones, the haze hanging over the sea. It is everywhere. You feel, against reason, it is sucking the life from the land.
- **Occult:** You look at the shimmering haze over the sea and recall a Native American legend. It concerned a spirit that floats over the water and seeps into the rocks, taking the life from everything. Now you look at the cliffs and the stones, and you see the shimmer everywhere.
- **Biology:** You are struck by the lack of life here. Eventually you find a small fish, washed up on the stones. For a moment, you think you see the sheen of its skin. Then you realise you are looking at a shimmer, the same shimmer as the haze over the water. The fish crumbles in your hands. Perhaps this haze is sucking the life from the island.

2. Core Clue: The meteor landed in the caves.

- **Astronomy:** Comparing what you see against the trajectory drawings, you realise the meteor must have hit the sea at a shallow angle, burying itself in the rock, beneath the cliffs. You notice a cave mouth leading into the rocks.
- **Geology:** The rock here is soft. A meteor would not hit the sea bed and stop; it would plough further down. You notice a cave. Perhaps the meteor is within the cave system.

The Caves

The entrance leads to a cave system. As the Investigators descend into it, the floor turns from sand to rock. The haze becomes denser and the rocks shine with the now-familiar shimmer. Deep down in the caves, it becomes almost possible to navigate without light.

The cave system is complex to navigate. It would take a layman days to map the system, exploring cave by cave, to find everything within. To navigate the system in a few hours, the Investigators may use an appropriate skill—perhaps **Biology**, to navigate toward the Colour by noting the dying moss; **Geology**, to navigate by the crumbling rock; or **Outdoorsman**, to descend a rock chimney using a rope.

Convention Play

The Dying Of St Margaret's works well for convention play. In a four-hour session, it is even possible to let the players create Investigators, using the instructions above.

If the players take their time exploring St Margaret's school, you may need to cut later scenes. If necessary, cut the scene in the Grey Sailor by allowing the Core Clue in the Attic scene to point directly to the workshop. If you do this, avoid mentioning Sarah McCree.

In any case, the Investigators should find the workshop at least 90 minutes before the session ends, then enter the caves at least 45 minutes before the session ends.

If the Investigators stay together in their exploration, they encounter the following in sequence. If anyone wanders off alone, they encounter an event alone. As before, whenever these encounters mention a Seeker of Truth, rephrase to refer to the person a particular Investigator is seeking—for example, "You find your brother's dusty corpse."

- There are remnants of a base camp. It looks as though the Seekers remained here for few days, perhaps venturing into the caves, then returning to the camp each night. The Investigators find personal effects of the person they seek: a belt buckle, a gun, a diary.
- In a quiet, still cave is the dusty corpse of one of the Seekers of Truth. The eyes are open, staring at the wall. As the Investigators approach, part of the Seeker's face crumbles to dust. (4-point Stability test if the corpse is a stranger, 6-point test if the person was known to the Investigator.)

4/6

- Whenever the Investigators disturb the air, or touch the corpse, another part of the corpse crumbles.
- While exploring the caves, the Investigators find personal effects of other Seekers, together with parts of bodies—hands, hair, pieces of face—that crumble if touched. There is no need for Stability checks for these events; they are subsumed in the checks before and after.
- In another still cave lies another body. As the Investigators approach, it blinks; then its head begins to turn, until it looks at the Investigators. It exhales, noisily, as if trying to speak.

Again, touching the body or disturbing the air kills the Seeker. If the person is unknown to the Investigator, this prompts a 5-point Stability test for witnessing the death, a 6-point test for causing it. If the person was known, there is an 8-point Stability test for witnessing the death, a 9-point test for causing it.

5-9

All these Stability checks are Mythos-related shocks.

As the Investigators progress deeper, the haze becomes stronger, a luminous fog that makes sight almost impossible.

Pulping St Margaret's

Oh, all right. You can play this as a Pulp adventure. Here's how.

First, make your descriptions vivid. Rather than a seedy backwater, describe the school as a forbidding clifftop house. The inhabitants, instead of doomed innocents, should be creepy, guarded and robotic.

Second, ramp up the horror quicker. In Purist mode, the Investigators should slowly come to fear the shimmering haze; in Pulp, the plants should be purple, and wave eerily in the night air.

Make the machine in the workshop demonic. When it starts, it rips a hole through worlds, accompanied by blazes of colour. If you want combat, it summons a black, half-formed mass that writhes and thrashes at anything near:

Half-formed Mass

Abilities: Athletics 8, Health 12, Scuffling 10
Hit Threshold: 4
Weapon: +0 (black tendril)

For more combat, add shotgun-toting locals. They attack the Investigators to make them leave, because "some things were not meant for man to know." If captured, they may, at your discretion, reveal clues from the scene "The Grey Sailor."

Shotgun-toting Local

Abilities: Athletics 7, Firearms 4, Health 8, Scuffling 6
Hit Threshold: 3
Alertness: +1
Weapon: +0 (shotgun)

Finally, the Workshop contains a ritual to bring the Colour into tangible form. Hence the final foray into the caves will be a pistol-packing mission to eliminate the Colour. In tangible form, the Colour fights using the statistics given in the *Trail of Cthulhu* rulebook.

Finally, they come to a deep and vast cavern. It is filled with the fog, shifting, living and alien. The Investigators feel it surrounding them, inside them, drawing the life from them.

Epilogue

The adventure ends here, with the Investigators in the cave, surrounded by the Colour. To end each Investigator's story, focus again on their Drives.

First, emphasise to each Investigator the futility of their Drive. Against this incomprehensible being, what hope is there? Ask each player, in turn, whether their Investigator would give up hope. For any that would, use the rule of Anagnorisis—an immediate loss of 8 Stability points and their Drive.

Finally, ask each player to narrate an epilogue for their character. Do they remain in the cave forever, the life slowly draining from them? Or return to the real world and give up hope? Are they found screaming on the beach? The end for their character is in their hands.

What Comes After

Although this story isn't suited to campaign play (except as part of *The Final Revelation*), there are enough loose ends to lead to other scenarios, with different teams of Investigators.

The most obvious loose end is the Machine. What was it for? If the Investigators started it, what sort of portal has it opened? Future scenarios might involve Investigators trying to fix whatever problems were created.

Also, this scenario makes playful references to other GUMSHOE systems. The Seekers of Truth eventually called themselves the Ordo Veritatis—the same name as the central organisation in *The Esoterrorists*. The Machine was suggested to open a portal to the "Dark Outside"—perhaps another name for the "Outer Black." Perhaps an *Esoterrorists* or *Fear Itself* scenario might follow, taking place years after this story.

THE WATCHERS IN THE SKY

Introduction

The Watchers in the Sky is the second Purist adventure for *The Final Revelation*. As with all Purist adventures, there is no glory in fighting the Mythos, only madness and despair. Your gun will not help you; your fists will not save you; your friends cannot be trusted. The more you discover, the more the Mythos infects your mind, and the minds of those you love.

If you are playing this scenario as part of *The Final Revelation* framing sequence, this episode is triggered in the section "Meeting 2: A Stranger Among Us," when the Investigators visit Dunning's Quality Timepieces shop and hear the strange bird-thing singing in its cage.

Hooks

- In a hospital for the mentally ill in South London, Investigators find an inmate who feeds the birds, paranoid they are watching him.
- In a scientific laboratory, other Investigators find their experiments disrupted by strange, misshapen birds, who stare from the rooftops.
- In Brichester University, more Investigators dissect one of these birds, and find it constructed from human, animal and alien body parts.

The Horrible Truth

Under a hill in Rydal, in the English Lake District, roosts an immense flock of misshapen birds. They inhabit a cave system, descending immeasurably deep into the earth, topped with a vast engraved stone.

Much about these creatures is unknown; indeed, it is *deliberately* unknown, as will be explained below. Some say the creatures have existed since prehistoric times; some that they are recent arrivals, aliens who flew across the depths of space. Some believe they have always been there; some argue they return, each century, before departing for other worlds.

Two things appear certain. First, they infect others. Instead of a brain, the creature have a black gelatinous substance, perhaps fungoid, perhaps cancerous, but more likely alien in origin. This substance is found, in varying quantities, in the brains of those who have died investigating the creatures. The method of infection is unknown. Perhaps the substance passes through the air; perhaps it passes by touch; perhaps it transmits telepathically. Whether or not it infects the Investigators is unknown.

Second, the creatures are assimilators. They are constructed from an amalgam of human, animal and alien body parts. The wings of one creature, for example, might be constructed from bones resembling a human hand or ribcage. Their eyes might be those of cats or humans, but are certainly not bird eyes. The exact anatomy differs from creature to creature, so that the feet of one may be human, whereas those of another are unidentifiable metallic claws. This, it appears, is how they evolve—by stealing anatomies from other creatures. Indeed, the floors of the Rydal caves are littered with failed experiments, ill-assembled creatures that did not survive.

A cult has formed around these creatures. In the old stables in Rydal, various farmers sacrifice animals while the creatures gather, watching from the rooftops. After the ritual, the creatures tear the sacrifice apart, while the cultists descend into frenzied copulation. Suicides have also been known, at the great stone atop the Rydal mine, although it is never clear whether such incidents are motivated by worshipful ecstasy or despair.

That, then, is the Horrible Truth. It is a deliberately incomplete truth, as explained under "The Missing Pieces" below.

The Spine

Before the Investigation begins, the Investigators have opening scenes with their loved ones. Various peculiarities about their bodies are made clear: a bent little finger, a fractured arm, a swelling around a wedding ring.

Thereafter, the Investigators have three potential starting points. Some start at St Mary Bethlehem Hospital in South London, visiting an inmate who raves about creatures watching him. Scientifically-minded Investigators begin at the Royal College of Science, London, where experiments show mysterious results whenever the creatures roost around the building. Other Investigators start at Brichester University, dissecting one of the creatures.

All these beginnings lead to the Old Library at Brichester University. Investigations at Brichester suggest the creatures come from around Rydal, a village in the English Lake District. The inhabitants of Rydal are unwelcoming, but clues reveal the existence of a cult, apparently based around the creatures. Investigators observe the cultists at a ritual in the stables, where, watched by the creatures, the cultists copulate.

Two other events intrude into the investigation. First, the inmate at St Mary Bethlehem dies, and a black alien liquid is discovered within his brain. Second, a young Rydal resident attempts suicide, above the creatures' roosting-place.

Finally, the Investigators descend into the creatures' lair. Some creatures are dead, their bodies showing physical pecularities identical to those of the Investigators' loved ones. Suddenly, a flock of the creatures rushes at the Investigators, forcing them to flee, die or mount a futile fight.

The Missing Pieces

Many Cthulhu Keepers have experienced the following situation. While beginning a scenario, they build an air of mystery, creating anticipation and tension. However, all this dissipates when the players realise *what the monster is.* Once they do, the monster becomes familiar, something they have investigated, fought and conquered before. Even when a new monster is used, it can seem dull once the Investigators uncover exactly what it is.

Lovecraft took a different approach to monsters, giving glimpses of what they might be, but leaving much unexplained. The *Trail of Cthulhu* rulebook follows suit, giving competing explanations for parts of the Mythos, without hinting which is correct. In this scenario, likewise, neither the mystery nor the monsters are ever quite explained. The Investigators discover much about the creatures, but how the pieces of the jigsaw fit together is left to the players' imagination.

This gives an unsettling air to the mystery. At the end of the scenario, just like Lovecraft's protagonists, the Investigators have only a partial solution to the mystery, and more questions than answers.

For clarity, here are the known facts, the pieces of the puzzle:

- There are creatures under the Rydal hills.
- Their brains are a black liquid, which is also found in the brains of various corpses in the scenario.
- The creatures are constructed of human, animal and alien body parts. Some of the human parts resemble those of the Investigators' Sources of Stability.
- A cult follows the creatures.
- Young women have committed suicide near the creatures.
- The creatures are watching the Investigators.
- A mysterious symbol recurs throughout the scenario, sometimes being drawn by the Investigators, as though their hands are controlled.

Additionally, there are many teasing references to other Mythos entities, especially the Mi-Go and Shan.

However, how these pieces fit together is not explained. Particularly, the following points are unexplained:

- What are the creatures?
- Where did they come from?
- How does the infection spread?
- Why do the creatures watch?
- Why do they watch the Investigators, in particular?
- What does the cult get from worshipping the creatures?
- Why do the women commit suicide?
- What does the symbol mean?

Avoid answering these questions. Admittedly, sometimes answers may seem unavoidable. If, for example, a player is desperate to know why a Source of Stability has been infected, you might invent an answer. The explanation that the infection spreads "telepathically" should suffice. However, as far as possible, leave questions unanswered.

Should you, then, admit to your players the mystery cannot be solved? Egalitarian Keepers, who dislike misleading their players, might indeed tell players answers are missing. Then, because the players know their Investigation will be incomplete, their imaginations can run riot without affecting your conscience. Admittedly, I have never met an egalitarian Keeper, nor one who dislikes misleading players, but their existence is possible.

A more cruel approach is to leave players in the dark. Imply, in your manner, the mystery is soluble. Perhaps the Investigators missed a clue somewhere? Perhaps everything will be revealed later? Hint that the secrets of the Mythos are a few investigations away. Finally, shrug, suggesting you would love to tell them the solution, but the rules forbid it.

In practice, I suggest a combination of the second and third approaches. During the investigation, imply there is always more to investigate. At the end, admit the loose ends were deliberately left. You may want to investigate these loose ends in future investigations and, if you do, cheerfully invent solutions to any of the mysteries above.

Creating Your Own Investigators

Rather than using the pre-generated Investigators, the players may prefer to create their own. If so, encourage Investigators with a grounding in science or medicine. Physicists, chemists or other researchers in the physical sciences are based at the Royal College of Science, beginning in the Edwards Laboratory scene; medical doctors, zoologists or surgeons are based at Brichester University, beginning in the Dissection Theatre scene; non-scientific types should take Abraham Kale as a Source of Stability and, hence, begin in the St Mary Bethlehem scene. Ensure an even spread among these three types.

In creating Investigators, use the following restrictions:

- Cap Health, Stability and Sanity at 10.
- Cap **Credit Rating** at 6.
- Reduce General Build points to 50 and Investigative Build points to 16 (for two players), 12 (for three players) or 10 (for four or more players).
- Combat abilities are unlikely to be useful, although **Firearms** gives some benefit. At the end of the scenario, **Fleeing** will, unsurprisingly, be beneficial.

As with the example characters, each player should describe one Source of Stability for their Investigator in detail. This Source will be the subject of their first scene. Hence, ensure Sources of Stability are accessible (that is, nearby and able to communicate) for that first meeting. Other Sources of Stability may be outlined briefly, but will not feature in detail. Similarly, Pillars of Sanity may be described briefly, but are not a focus of this scenario.

Sample Investigators

Here are five Investigators designed especially for The Watchers In The Sky. Each Investigator has a particular Source of Stability, shown in italics, who will appear in the scenario. Other Sources of Stability are described only briefly and play little part. Occupational abilities are marked with an asterisk.

The first scenes for these Investigators are as follows: Nurse Sally Williams and Arthur Nott begin in St Mary Bethlehem Hospital; Professor Lucas Wright begins in the Edwards Laboratory of the Royal College of Science; Dr Andrea Parker and Miss Howell begin in the Dissection Theatre at Brichester University. These scenes are described fully below.

[= Occupational ability]*

Arthur Nott

Concept: Seminary student
Drive: Revenge
Occupation: Clergy
Sex: Male

Sources of Stability: *Abraham Kale*, former tutor; Roger Mulgrave, lover.

Investigative skills: History* 2, Languages* 2, Bureaucracy 1, Occult 2, Library Use* 2, Theology* 2, Credit Rating 4, Oral History* 2

General skills: Athletics 10, Driving 5, Health 10, Sense Trouble 5, Stability 8, Firearms 3, Psychoanalysis* 10, Sanity 10

Your father made a decent amount of money in steel and expected you to follow him into the industry. However, you never felt comfortable: you felt no affinity with the blokish, overfriendly steelworkers. Your church, a high Anglican communion called All Saints, become your refuge. Eventually, the Church became your career, when you left the factory to train as a priest. When you visited the seminary in Wales, the man who interviewed you was Abraham Kale.

Although your father did not understand your decision, he did, to his great credit, support it. He would not understand your other decision, which was to take a male lover at the seminary: Roger Mulgrave, an older student of the working class. The seminary treated the liaison with traditional British discretion, never mentioning it providing you kept it hidden. Throughout this, Abraham Kale was your tutor. Again, he never acknowledged the affair openly, but you felt he supported it, through oblique advice and unwavering support. You suspect he had similar leanings himself.

You are in your final year at the seminary, now. Your new tutor is more distant and authoritarian. Abraham Kale retired, on medical grounds, to St Mary Bethlehem Hospital. Today, you will visit him, the first time you have seen him since he left the seminary. What you see will spark your desire for revenge, against whatever has infected Abraham Kale's mind.

Nurse Sally Williams

Concept: Precocious nurse
Drive: Curiosity
Occupation: Nurse
Sex: Female

Sources of Stability: *Abraham Kale*, a patient; Victoria Wayling, flatmate; Father McGovern, priest.

Investigative skills: Bureaucracy 1, Reassurance* 2, Biology* 2, Library Use 2, Medicine* 2, Assess Honesty* 2, Credit Rating 3, Oral History 1, Pharmacy 2

General skills: Driving 5, Fleeing 10, Health 10, Sense Trouble 5, Preparedness 6, Stability 10, First Aid 10, Sanity 10

Having worked at Guy's Hospital for ten years, you have learned that you generally do know best, and are prepared to tell people so. You have worked in nursing for ten years and are beginning to fit the matron stereotype better than any other. This being the case, you are prepared to live up to it.

However, nursing can be monotonous, and you compensate with endless curiosity about patients and conditions. Recently, you covered a shift for another nurse, Victoria, with whom you share a flat in Battersea. For one wonderful day, you worked at St Mary Bethelem hospital, fascinated by the crazies, half-wits and those on the journey to one of those states. Most of all, though, you liked Abraham Kale, who reminded you of your late grandfather. His madness seemed tempered with lucidity: indeed, you wondered whether he was genuinely mad, or had merely had strange and disturbing experiences. Under the pretext of fetching Victoria from work, you visit Mr Kale regularly.

Professor Lucas Wright

Concept: Rationalist academic
Drive: Scholarship
Occupation: Professor
Sex: Male

Sources of Stability: *Gertrude Wright*, wife; Roberta Barry, secretary; Mike Black, the pub landlord.

Investigative skills: Library Use* 2, Bureaucracy* 2, Intimidation 2, Photography 1, Geology* 2, Physics* 2, Assess Honesty 1, Credit Rating 5

General skills: Fleeing 5, Health 10, Sense Trouble 5, Preparedness 10, Stability 10, Mechanical Repair 8, Sanity 10

If you are honest, you had expected to get further by now. When you started your career in physics, it seemed as though everything of import had been discovered. You turned to Geology, instead, just before bloody Einstein

came along and physics got exciting again. Now, if you are honest, you dabble in both fields, unsure which is your speciality. You would welcome a clear purpose to your work, but are unsure what it might be.

Indeed, your personal life reflects this lack of direction. Your marriage potters along in a comfortable way. You love your wife in the same way you do your old slippers, although you refrain from expressing your feelings to her in precisely this manner. Your secretary is a friendly ear, although not, as you had hoped, a potential conquest. Overall, life should be good, but does not feel that way. Although your body is growing old, your mind feels sharp, waiting for something to latch on to.

Dr Andrea Parker

Concept: Ambitious academic
Drive: Arrogance
Occupation: Scientist
Sex: Female

Sources of Stability: *Lucinda Parker*, daughter; Andrew Parker, husband; Rhys Powell, mentor.

Investigative skills: Bureaucracy 1, Intimidation 1, Reassurance 1, Streetwise 1, Biology* 4, Geology 1, Library Use* 4, Oral History 1, Credit Rating 2

General skills: Athletics 5, Driving 5, Health 10, Preparedness 5, Scuffling 5, Stability 10, Electrical Repair* 6, Mechanical Repair 3, Sanity 10

It is difficult enough to be a bloody woman scientist, let alone a biologist, with the Physics and Chemistry Departments sneering about it not being a real science. If that means you need to ruffle a few feathers to get yourself heard, so be it. As a student, others advised you not to pursue an academic career, and hence you learned not to listen to others. Students see you as harsh, which you like, although you have a soft spot for some of the younger females.

You tend not to mention your husband, Andrew, at work. He is a good man, but you do not want to be seen as an adjunct to him. Your daughter, however, is the centre of your world. You remember her first words, pleased that "mummy" came before "daddy," although irritated that "nanny" came soon after. Considering she is largely raised by Andrew's mother, however, it is not surprising. Lucinda is three now and precocious, taking after you.

You live for science, although, if you are honest, you live for the academic fight rather than the pursuit of knowledge. You know your field well and like nothing better than debunking the latest piece of nonsense.

Miss Helen Howell

Concept: Student
Drive: Ennui
Occupation: Scientist
Sex: Female

Sources of Stability: *Mark Terry,* fiance; Andy, a tramp.

Investigative skills: Flattery 1, Intimidation 2, Streetwise 2, Photography* 2, Astronomy 1, Biology 2, Library Use* 2, Assess Honesty 1, Credit Rating 2, History 1

General skills: Athletics 10, Driving 5, Filch 5, Health 10, Sense Trouble 4, Scuffling 4, Stability 8, Sanity 10

Growing up in Wales, in a mining family, was dull. Your future, as a miner's wife, was mapped out and, in rebellion, you studied school subjects unsuitable for a girl. Wanting greater adventure, however, you applied for a charitable scholarship, using a fabricated hard-luck story, and ended up in Brichester.

Although the first year was exciting, the novelty is now beginning to pall. You have little time for the other students, whom you find provincial and dull. Only two people have caught your attention. One is Andy, a tramp, who regularly tells you of his travels in return for a slice of a bread-and-butter. The other is Mark, another scholarship student, from similarly working-class origins in Halifax. He proposed to you and, mainly to see what engagement was like, you accepted.

This morning, while waiting for lectures to start, you found a strange-looking bird lying dead in one of the University quadrangles. Planning to dissect it, you brought it to the Dissection Theatre, where you found Dr Parker. Perhaps you should show it to her. She will either be interested or angry. Either will keep you amused.

Cast of Characters

Here are brief descriptions of the major characters in the scenario. Each description contains three things you can do, at the gaming table, to bring the character to life.

You are unlikely to need statistics for these characters. If you do, use the following statistics for Abraham Kale, Mr Singh, Nurse Wilkie, Bartholomew Thomson and Father Vincent:

Abilities: Fleeing 5, Health 5
Hit threshold: 3
Weapon: –3 (Fists, inexpertly used)

Use these statistics for all other characters:

Abilities: Athletics 10, Scuffling 5, Fleeing 10, Health 10
Hit threshold: 4
Weapon: –2 (Fists) or –1 (Improvised weapon)

Abraham Kale

Abraham Kale is an old and distracted man, with white hair and a beard, both cut immaculately by the nurses.

Having been in hospital two years, he is institutionalised, unsure of his own thoughts and obedient to the staff. He shuffles about in slippers and dressing-gown.

Kale's former profession changes according to the Investigator who has selected him as a Source of Stability. If you are using the Investigators above, he was a tutor at a seminary.

To portray him:

- Speak slowly, as if confused, while staring at different parts of the room
- Mime filling in *The Times* crossword
- Occasionally display a *tic* (see "St Mary Bethlehem Hospital" on page 52)

Nurse Rodgers

Nurse Rodgers is capable, although perhaps something of a bully. Like many nurses, she has ceased to see her charges as human beings, viewing them as collections of symptoms and things to be controlled. She appears kindly, although her job's routine has become habitual, rather than a matter of pride. To portray Nurse Rodgers:

- Pause before speaking, to ensure you phrase things correctly
- Speak directly, with unwavering calm
- Sit back from the table

Nurse Wilkie

Nurse Wilkie is a fluttery, nervous girl. She is unsure whether she is a good nurse, which, of course, makes her mediocre. Out of her depth and quick to panic, she is someone you would want far away from you in a crisis. To portray Nurse Wilkie:

- Speak in a slightly high, nervous voice
- Make ineffectual, fluttering gestures with your hands
- Lean toward the person to whom you are speaking

Dr Bradfield

Like many doctors, Dr Bradfield has no real time for others. To be fair, he does indeed have little time, which forces him to cut conversations short. He brooks no argument and expects others to follow instructions. To portray Dr Bradfield:

- Speak sentences with finality, as though attempting to end the conversation
- Look mainly at papers, only giving occasional eye contact to the person to whom you are speaking
- Angle your body to the side, as if you are about to leave

Bartholomew Thomson

Bartholomew Thomson is playing at academia while he awaits his inheritance. He is fashionably and fussily dressed, which does not mean he looks good: his latest affectation, for example, is a purple and gold cravat. Bartholomew much prefers the club to the laboratory. To portray him:

- Speak in a upper-class accent
- Gesture with a mimed drink or cigarette, held in your right hand
- Lounge back in your chair

Mr Singh

Mr Singh is the librarian of Brichester University's main library. Like many immigrants of the period, he is more English than the English, dressed precisely in a three-piece suit. His adoption of the mannerisms and fashions of his new home country is, he considers, a matter of respect, not of affectation. To portray him:

- Speak precisely and formally, in a murmur
- Make a suppressing motion with one hand, as if unconsciously urging your interlocutor to be quiet
- Lean over the table slightly

Nasmyth

Nasmyth is a farmer and has no time for outsiders. He smells of stale pipe tobacco and unwashed clothes. To portray Nasmyth:

- Imagine the person to whom you are talking smells awful
- Speak with rasping, suppressed anger
- Occasionally glance over the other person's shoulder. If questioned about this, deny you are doing it

Dunn

A grossly fat pub landlord, Dunn makes his antipathy clear in his face. If he does not like you, as is probable, he remains stony-faced, speaking in a manner that is technically polite and clearly disrespectful. If his dislike tempers to neutrality, it shows itself in a softening of his face. To portray Dunn:

- Speak bluntly, with a deadpan face
- Imagine the other person is an idiot, if you dislike them, or pleasant, if you like them
- Mime pulling a pint of beer, polishing a glass or leaning forward over the bar

Father Vincent

Father Vincent's caring nature has been sorely tested by living in Rydal. He attempts to appear kind, but is no longer sure whether he genuinely feels it. To portray Father Vincent:

- Be overtly welcoming and friendly
- Furrow your brow when you talk about difficult subjects
- Sigh occasionally

Derrick Rawlings

Derrick Rawlings merely wants a quiet life: to live in his house, farm during the day and sit quietly in the pub in the evening. To some, he is a beaten man, but he is content in his simplicity. To portray Derrick Rawlings:

- Sit back in your chair, staring into an imaginary whisky glass
- Speak quietly, as if unused to talking
- Leave pauses as you gather your thoughts

Alice

There is nothing for Alice in Rydal. She is bored, ready to latch on to any deviation from the norm. Accustomed to rejecting the advances of drunk farmers, she is wary of speaking to strange men. To portray Alice:

- Answer distractedly, as though thinking about other things
- Rarely look at your interlocutor
- Wring your hands

Dr Colfe

Dr Colfe is a pathologist, overformal and easily forgettable. To portray him:

- Speak as though you have taken offence
- Move stiffly
- Occasionally tap the table to emphasise a point

Those Left Behind

Scene Type: Prologue

Begin with a Directed Scene for each Investigator *except* those connected to Abraham Kale. In these scenes, another player plays the Investigator's Source of Stability. These Directed Scenes are a slice of life, probably upbeat in tone, in which we briefly get to know the Source of Stability.

In these scenes, mention a minor physical deformity or injury for each Source of Stability. Do this either while setting up the scene (e.g. "You're visiting your fiance in hospital. It's nothing serious, just a cracked rib") or as an interjection into the scene (e.g. saying "Tell him your wedding ring is too tight and your finger is swollen" to a player portraying an NPC). These physical deformities are noted in bold, both here and later in the scenario.

Here are examples for the three Investigators described above who are unconnected to Kale.

- Dr Parker is playing with her daughter, Lucinda, in the nursery. As Lucinda hands her a doll, Dr Parker affectionately notices, as she has noticed before, her hand. **The little finger is slightly bent**, a defect present from birth.
- Professor Wright has breakfast with his wife, tea and toast and marmalade, in their quiet house in Mercy Hill. As he attempts *The Times* crossword, which today appears particularly fiendish, she tells him her plans for the day. She will go to the hairdressers, then to the jeweller to get her wedding ring loosened. Indeed, the **base of her ring finger is swollen**.
- Miss Howell is visiting her fiance in St Thomas' hospital, after he **cracked his rib** playing polo. He is comfortable, happy and chatty, although one of the nurses is rather too attentive for Miss Howell's liking.

Having met the Sources of Stability, we are unlikely to meet them again until near the end, when the Investigators discover their role in the horror.

St Mary Bethlehem Hospital

Scene Type: Core

St Mary Bethlehem, a hospital for the mentally ill, stands in a leafy London suburb. Well-heeled Investigators (with Credit Rating 4 or higher) drive there from London; those of more moderate means take the train (30 minutes from Charing Cross Station to Eden Park), then the bus for the remainder of the journey. Either way, the first view of the hospital is from the drive: a newly-constructed brick institution, surrounded by lawns and topped by a clock tower.

From the outside, it looks pleasant. On entering, the Investigators will be directed to the Geriatric Ward, in the East Wing of the hospital. As they navigate the corridors, which smell strongly of antiseptic and faintly of urine, it becomes gradually clear this is a home for the mad. Screams and moans penetrate the doors as they pass. Indeed, this is the new home of Bedlam, the notorious London asylum in which, for centuries, lunatics and moral bankrupts were incarcerated.

Although the site has changed, the ghosts of the old building seem to have followed to the new.

At the Geriatric Ward, Nurse Rodgers meets the Investigators. Experienced and capable, she is trailed by Nurse Wilkie, who is inexperienced, incapable and attempting to learn the ropes. Nurse Rodgers is deliberately upbeat, beginning with the good news. Physically, Kale is no less healthy than before, eating well and feeding the birds. He is under the care of Dr Bradfield, who is presently doing ward rounds (i.e. visiting all patients in turn), but available for interview if necessary.

Abraham Kale himself is on the lawn, sitting on cast-iron garden furniture, enjoying the weak sunshine and completing *The Times* crossword. For this he uses his left hand, since his **right hand is deformed**, shattered by a bullet during service in South Africa. Kale is wearing pyjamas and a dressing-gown and appears clean and well-kempt, albeit with a wildness about his hair. Appearing lucid, he greets the Investigators, remembering their names after a mental struggle. At first, he seems forgetful but genial, making polite conversation.

In the hospital Kale has developed a **tic**, which punctuates the conversation. The right side of his face tenses, as his head twists to the right. Simulataneously, he makes a hissing noise, sucking his lips against his teeth. (If, as Keeper, you can act a different tic better or more disturbingly, use your own instead.) Neither he nor the nurses have an explanation for the tic, although Nurse Rodgers reassuringly explains such behaviours are neither uncommon nor worrisome.

Gradually, however, Kale's polite conversation segues into raving. This happens subtly, by degrees, his utterances progressing from harmless fantasy to the clues given below. If asked about the birds, for example, he explains first that feeding them gives him pleasure; later, that he feels the birds understand him; and, finally, when the Investigators spend an appropriate point of an Investigative skill, that the birds read his thoughts.

Most disturbing of all is *The Times* crossword, which Kale continues to complete while conversing. At first, he solves an occasional clue, smiles, and enters the solution. Later, he scribbles more intently and vigorously, looking at the Investigators rather than the crossword, as if his hand was under external control. This frenzied writing becomes more and more obvious, until his entire arm appears disconnected, and the scribbling tears the paper. On closer inspection, he has filled the crossword with bizarre words, perhaps foreign or alien. The words spill over the edge of the grid, forming a strange, spiralling star shape.

2

On seeing this or having it called to her attention, Nurse Rodgers forcibly sedates Kale, injecting a syringe into his arm. Rodgers and Wilkie drag the unconscious Kale on to a trolley, before helping him into bed. His room is tidy, almost empty, everything he values being hidden away (see the clues, below). When he revives, shortly, he is sleepy but capable of conversation.

The following clues are available in St Mary Bethelem, either from Kale, Nurse Rodgers or by searching Kale's room, which Nurse Rodgers will allow. Remember, *any* plausible skill, not just those listed, reveals these clues. For example, if the Investigators do not use **Evidence Collection** or **Pharmacy**, they can use any other skill to find Kale is being watched by birds.

1. Kale believes there is something inside his head.

- **Reassurance:** Kale leans toward you. "It's the oddest thing," he says, "But I can feel it. In here." He points to his temple. "The nurses can't find it but I know it's there. They put it there. I don't know what it is, but it's there. Once, I tried to get it out with a knife, but they stopped me."
- **Medicine:** As well as his tic, Kale has a compulsion to scratch his left temple. Looking closer, the skin there is scabbed and bleeding. The scratching movement is an odd one; he drills a knuckle into his temple, as if trying to scratch an itch deep inside. It reminds you of one of your patients, who was convinced an insect was inside his brain.

2. Kale thinks he is being watched by birds.

- **Evidence Collection**: After a systematic search of Kale's room, you find hundreds of drawings of birds, taped underneath a drawer. All the birds are similar—misshapen and black. Kale himself appears in some drawings, with the birds surrounding him. They appear to be watching him.
- **Pharmacy**: Behind Nurse Rodgers' desk you notice large quantities of insulin, marked with Kale's name. In such quantities, insulin might be used to induce a coma, perhaps as treatment for paranoia. You ask to speak to Dr Bradfield, who confirms your hypothesis. Kale has been raving about being watched by birds and the doctor has recommended insulin coma therapy.

3. Kale believes the creatures watching him are nomadic aliens, who progress from planet to planet, observing species.

- **Occult**: As Kale's paranoid ravings continue, you are reminded of a pamphlet, *Otherwordly Observers*, to which you used to subscribe. Under your careful questioning, Kale reveals that the creatures watching him are aliens. You ask him how the aliens came to be here. He replies that they are nomadic, flying through space to spy on other lifeforms. Before he can elaborate, however, Nurse Rodgers approaches, and Kale falls silent.
- **Intimidation**: Leaning close to Kale, you whisper that, if he does not tell you everything, you will recommend him for a frontal lobotomy. Although your threat is empty, he believes it. He explains that the creatures are alien, travelling between planets, gathering information on other species. When he realises his explanation only makes him sound madder, he dissolves in tears.

4. Core Clue: These creatures are more fully described in the Old Library at Brichester University.

- **Simple Search**: Under Kale's pillow, you find a stash of correspondence. It is between Kale and Pritam Singh, the librarian at Brichester University. Kale asks for information on the creatures, to which Singh suggests various booktitles in the Folklore Archives of the Old Library. The correspondence ends with Kale asking increasingly specific questions and Singh replying that Kale must visit the Library personally.
- **Flattery**: You listen to Kale's stories of alien creatures with exaggerated respect. You praise his erudition and insight. Clearly, he is delighted, and explains that his theories are vindicated by documents in the Old Library at Brichester University. Sadly, he cannot travel there, but if he could, he would prove everything.

Edwards Laboratory, Royal College of Science

Scene Type: Core

The Royal College of Science's imposing redbrick and terracotta facade emphasises the college's academic stature, facing the Imperial Institute across Exhibition Road. It is easily accessible to Londoners, being minutes from South Kensington tube station.

Like the building, its research is modern and well-funded. Today, the Investigators are in the well-equipped Edwards Laboratory. Their research, which normally progresses with monotonous smoothness, is showing an unexpected result. This anomaly depends on the nature of the experiment, which, in turn, depends on the field of the Investigators' study.

- **Physics**: Before you bring the sample to the cloud chamber, unexpected tracks begin to appear in the cloud. At first, you think they are simply background radiation, but they are persistent, and unusual in length. Moreover, they appear at regular intervals, in pulses just over a second apart, a result inexplicable in terms of radioactive decay.
- **Chemistry or Pharmacy:** Before you add the sample to the test tube, a reaction begins. Naturally, you suspect a contaminant, but after using several test tubes, the reaction still occurs. Something appears to be acting as a catalyst, but you cannot think what. Moreover, and inexplicably, there appears to be a rhythm to the effect, the intensity of the reaction increasing suddenly every second, before immediately decreasing.
- **Geology:** This morning's experiment is mundane, testing a locally-obtained graphite sample for hardness. Oddly, however, you notice a phosphorescence, which seems physically impossible in this rock. You check for contaminants, but there appear to be none. Mostly unsettling of all, the phosphoresence pulses slightly, becoming brighter, for a moment, every second or so.

2

The anomaly lasts approximately two minutes, then vanishes. If, during that time, the Investigators have behaved like good experimenters, attempting to eliminate whatever is causing the anomaly, they will assume their attempts have been successful. However, after an hour, the anomaly returns. This pattern, with the anomaly vanishing then reappearing, continues throughout the day.

In investigating the anomaly, the Investigators have various options. They might consult the library, in the basement, for reports of similar anomalies. They might ask colleagues. Investigators of Credit Rating 4 or higher may contact colleagues through the 22 Club, a mysterious and secretive gentlemen's club for members of the College. If the Investigators require a colleague, suggest Bartholomew Thomson, who is described under

"Cast of Characters," above. He agrees to meet Investigators in the exotic rooftop gardens of a newly-opened department store, Derry and Toms.

The following clues are available. There are two core clues for this scene. First, the Investigators discover that the anomaly is caused by creatures perched on the Institute roof. Second, when they investigate these creatures, they find references to the Old Library at Brichester University.

1. Similar anomalies have been seen by scientists working in various fields throughout the College.

- **Credit Rating:** Bartholomew Thomson is waiting in the garden atop Derry and Toms. When you explain your experimental anomaly, he does not appear surprised. "It's a frightful bore", he says, as you walk through the Japanese section of the garden. "I've heard it from a few chaps. A chum of mine in Astronomy says something similar happens at night. His telescope blurs, every second or so."
- **Bureaucracy:** You catch the departmental secretary before she leaves for the day, mentioning difficulties with experiments. She shows you the agenda for the departmental meeting, which is considering complaints from two Professors over laboratory conditions. Although they work in different fields, both mention similar anomalies, with pulses occurring just over a second apart.

2. The anomaly resembles results from studies of cosmic rays and particles.

- **Physics:** In the College library, you look through experimental journals for matching cloud chamber results. At first, you draw a blank, until you find a particularly obscure journal, the *New Journal Of Experimental Cosmic Physics*, which contains a paper on a similar phenomenon. The cloud chamber tracks, judging from the diagrams in the paper, resemble yours, and a similar pulsing effect is described. However, these tracks came from emissions from meteoric rock. (See the handout "A Scientific Paper" on page 115.)
- **Chemistry:** The standard journals contain no direct reference to the anomaly. The closest reference you find is a letter in the *New Journal Of Inorganic Chemistry,* describing a remarkably similar effect, of a reaction that "pulsed" in frequency. The letter concerns the possibility of using cosmic rays as catalysts.

3. Core Clue: The anomaly occurs when strange, birdlike creatures roost on roofs nearby.

- **Reassurance:** A gin-and-tonic loosens Bartholomew Thomson's tongue. After joking for a while, he suddenly becomes more serious: "I'll tell you what the chaps are saying, but it'll sound fanciful. Have a look out of the window." You do, but can see nothing unusual, save for some large birds on the roof of the Institute. "It's those birds. The anomaly happens when they're there. If you don't believe me, look for yourself." You do not, of course, believe him. However, the next day, the anomaly recurs. When you look, the creatures are perched on the roof. Five minutes later, you hear a flutter of wings, and the anomaly stops.
- **Physics:** Something must be causing the cloud chamber tracks. Whatever it is, it appears, from the direction of the tracks, to be on the side of the laboratory facing the road. You clear everything on that side of the laboratory, but the anomaly persists. Idly, you wonder whether something outside is causing the effect. Across the road, you notice the Institute, with birds perched on the roof. As you watch, the birds fly off, and the anomaly stops. At first, you think it is a coincidence. However, when the birds return later, the anomaly returns. When they go, the anomaly appears to go with them.

2

4. Core Clue: The creatures are described in more detail in the Old Library at Brichester University.

- **Credit Rating:** You ask a colleague in Biology to investigate the birds, but all he can find is obscure references to documents in the Old Library at Brichester University.
- **Streetwise:** Crossing the road, you ask the Institute doorman what the birds are. He has little idea, but calls a colleague, who explains that they are something of a puzzle. They once corresponded with the Old Library at Brichester University to investigate. There may be more details there.

Dissection Theatre, University of Brichester

Scene Type: Core

In the basement of the Temple Building, one of the more hideously Gothic of the University buildings, is the Dissection Theatre. It is pentagonal, five tiers of narrow wooden seating surrounding a central dissection table. It is also dim,

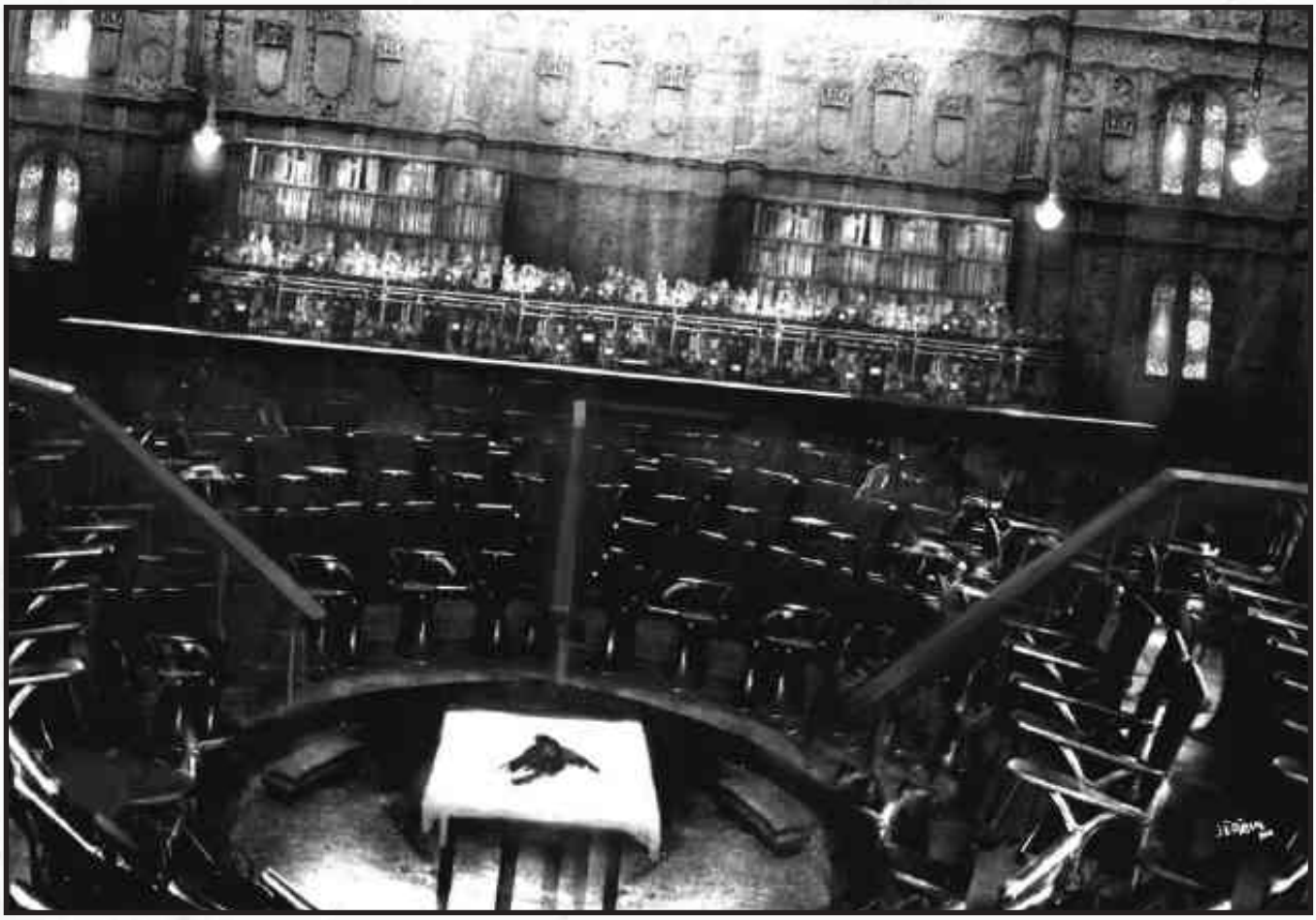

the light from the filthy stained glass windows barely illuminating the dark and stained wood.

When not packed with students, it is also a useful dissection room, if one does not mind the jars of pickled organs, animal, human and unidentifiable, that line the walls. There is no formal booking procedure for this room, which is hence the subject of abuses of seniority and hideous turf wars between the Schools of Medicine, Biology and Zoology. Any member of the University may theoretically use the room, although senior Professors often occupy it merely to prove they can.

Today, the room is empty save for the Investigators, although, as Keeper, you should emphasise that a senior staff member may enter at any moment. The subject of dissection is a strangely misshapen bird, found by a student lying in one of the University quadrangles. For game purposes, this student may either be an Investigator or an NPC (if an NPC, use the description of Miss Howell, above, for inspiration). If the Investigators are biologists or zoologists, the creature is a useful and exciting find; if their field is Medicine, it is merely a curiosity.

As the dissection proceeds, it becomes stranger. The bird is of no known species. Once opened, its structure does not appear alien; indeed, it appears *assembled*, roughly, from ill-fitting parts. The eye resembles a dog's eye, not that of a bird. The organs are not where they should be and some are missing. The bones of the wing resemble, unmistakably, the bones of a human hand.

3

Some Investigators will think this exciting; some will find it disturbing; some will consider it a prank. The last group, however, soon have cause for doubt. On leaving the Temple Building, the Investigators find themselves watched, by similar misshapen birds, sitting motionless on the rooftops.

2

1. There is strange matter in the brain.

- **Simple Search** (Dissection): As you push the scalpel into the brain, a black, viscous liquid oozes out. It reeks of mould, although there is an odd underlying sweetness to the smell.
- **Biology:** Some instinct, perhaps the unnatural bulging skull, draws you to begin your dissection with the head. When you do, a black substance oozes out. It resembles caviar, partly solid, partly liquid. The Dissection Theatre fills with its unnatural, sweet scent and with the stench of mould.

2. The creatures are composed of human, animal and alien matter.

- **Credit Rating:** You hand the student a scalpel, ordering her to dissect the creature. She begins, nervously, by opening the rib cage. When she looks inside, she retches, and runs from the room. You look at the creature. It appears oddly assembled from human and animal parts. The rib-cage appears constructed from human finger bones, surrounding lungs resembling those of a small dog. Other parts are unfamiliar and you are unable to shake the idea they are alien.
- **Simple Search** (Dissection): You examine the rib cage. It is strangely assembled from both human and animal parts: human finger bones surrounding a dog's lungs. Still other parts are like nothing you have seen before.

3. The structure of the interconnecting tissue itself is strange, perhaps fungal, perhaps cancerous.

- **Medicine:** Although zoology is not your field, you know something is wrong here. The creature appears stuck together, like grapes held together with mould. Indeed, the connecting substance appears fungal, although it also reminds you of cancerous growths in your patients.
- **Flattery:** Having dissected the creature, you decide to get a second opinion from an acquaintance in Biology. You explain that only he has the required expertise, which makes him willing to help. At first, he thinks the animal is a prank. On closer examination, he becomes more unsettled, and lifts some of the connecting tissue on the end of a pencil. To you, it appears to be a sort of fungus; to him, it resembles cancerous tissue. Unsettled, he throws away the pencil and returns to his office.

4. Core Clue: These creatures are more fully described in the Old Library.

- **Biology:** You are not surprised that the literature in the Biology Library makes little reference to the creature. Curiously, however, a "hybrid creature" containing "fungal matter" is briefly mentioned in one paper. Although the mention is only sentence long, there is a reference to a book called *Creatures of Hypothesis and Fact,* which, you discover, is held in the Old Library.
- **Bureaucracy:** You recall you are ostensibly entitled to 15% of the Departmental Secretary's time, a privilege you rarely use. Insisting on this time now, you set her to work researching the creature. By the end of the day, she turns up a reference to *Creatures of Hypothesis and Fact,* a book held in the Old Library.

The Watchers

Scene Type: Antagonist Reaction

From now on, the Investigators are watched—not constantly, but with increasing frequency. Birds perch on rooftops and trees, still, silent and staring, surrounding the Investigators. When the Investigators move, the birds behind them fly to take new positions in front, so the encasement remains complete.

2

Occasionally the birds stop watching. They appear to make this decision simultaneously, all flying upwards at the same time. As they fly away, they form a starry, spiralling pattern, which rotates as they move through the sky. For a while, the Investigator is free from the watchers, until later, when they return.

Such behaviour may, quite naturally, provoke the Investigators' hostility. If an Investigator raises a weapon, the creature targeted flies directly and silently at the potential attacker. If using a gun, the Investigator gets one free shot before the combat rules kick in. In such combat, use the following statistics for the creature:

Abilities: Weapons 3, Health 3
Hit threshold: 3
Weapon: +0 (beak)

Hence, the creatures may be dispatched with relative ease. If a carcass is examined, any of the clues from the Dissection Theatre scene, above, are available. There are always more creatures, however, and they always come back.

Old Library, University of Brichester

Scene Type: Core

In this scene, the Investigators meet. This requires coordination; cheat arrival times and locations to make the meeting possible. Perhaps the Investigators arrive together at the station; perhaps one Investigator overhears another asking for a specific archive; perhaps, while staying in Brichester, they are accommodated in adjacent rooms. By some coincidence or happenstance, the Investigators must be brought together. If in doubt, ask the Investigators to decide how they meet.

However they meet, the Investigators have had a pleasant journey; travelling from London to Brichester, by train or car, is direct and easy. For accommodation, those of Credit Rating 4 or higher are provided with a furnished flat, intended for visiting scholars, and invited to dine at High Table, an elaborate ceremony with mediocre food and excellent port. Those of Credit Rating 2 or 3 are, if scholars, offered student rooms. These are functional, but have the enormous disadvantage of proximity to students, many of whom possess gramophones, jazz records and a liking for late night parties. Another option for such Investigators is a local bed-and-breakfast establishment, The Swan. Those of Credit Rating 0 or 1 will be delighted to discover the library is warm and open throughout the night.

The Investigators find the Old Library centrally located within the University, inside the bleached-white main building. While researching, the Investigators spend most of their time in the reading room, which is airy, pleasant and silent. Less commonly used archives, including the Folklore Archive, are stored in filing cabinets in the basement. The librarian, Mr Singh, is formal, helpful and used to dealing with scholars of various social backgrounds. He is, however, quick to silence any readers who talk too loudly or for too long; murmurs are the correct way to converse within the library. Other readers, too, will cut short prolonged conversations, with a polite and disapproving "please" or simply "Ssh!"

Over two or three days of research, the following clues are available to the Investigators, either through the library or through conversing with those who know how to use the library.

1. Similar phenomena have been reported in Tibet.

- **Library Use**: A chance reference to the Institute of Geography leads you to an article, "Further Observations Regarding the Himalayan expedition," in their 1816 *Journal*. The author, James Bradbury-Finch, reports discovering a creature "assembled of diverse parts from man and beast and from those I know not… seemingly bound by fungus." This creature, however, is not avian, but ape-like. (See the handout on page 115.)

2. Carcasses resembling those of the creatures have also been found close to Brichester, in the Severn Valley.

- **Biology:** A letter in this year's *Proceedings of the Royal Biological Society,* from Dr Julius Bailey, discusses a specimen found dead within the Severn Valley, approximately 15 miles from Brichester. Externally resembling a large insect, the specimen proved to be a "strange contraption of bones and sinew, apparently from many animals. Had I not observed, from my window, another such creature in flight, I would have assumed the specimen a contrivance, yet I do believe it real."

3. The experimental anomaly, observed in the Royal College of Science, is strongly connected with cosmic phenomena.

- **Geology**: The geological reference section is small and contains odd cross-references to the Folklore Archive. At first you find these irritating, but later find them useful. One local legend, for example, recounts a meteorite with a similar pulsing phosphoresence. By cross-referencing with astronomical reports, you can date the meteor shower to within a few months in the year 1598.

4. Wherever these creatures are reported, cults have formed around them.

- **History:** In researching the creatures, you come across a book, *Creatures of Hypothesis and Fact,* which describes cults forming around flocks of birds. Several such have been reported; in the Lake District, one such cult was documented, through letters from the local priest, in 1598. Reportedly, the cult sacrificed their daughters to the birds, who afterward ate the offered corpses.

5. Myths regarding ravens and crows may be attributable to such creatures.

- **Library Use:** *Creatures of Hypothesis and Fact* has an extensive, if ill-organised, collection of legends on crows and ravens. Since

medieval times, ravens have been reputed to guard the Tower of London. On the death of a raven, the others gather round in a "raven funeral," squawking as it is buried. A diary entry from 1816, referred to but not held in the archive, notes an instance of the ravens tearing each other apart.

6. Medieval literature, from the 12th, 13th and 14th Centuries, reports similar assembled creatures.

- **History:** References to assembled creatures occur throughout medieval literature, although such creatures appear to resemble snakes rather than birds. One such creature is a cockatrice; another a basilisk; and reports differ from which other creatures they are assembled. The books describing such creatures appear at intervals of just over a century: *De Naturis Rerum* in the 12th Century; *De Proprietatibus Rerum* in the 13th; John Trevisa's translation of *De Proprietatibus Rerum* in the 14th.

7. These creatures return with a regular cycle, known as the Great Cosmic Cycle.

- **Occult**: Your research of cosmic entities is fascinating but inconclusive. However, there is one constant in your research: a reference to a 19th-Century Bavarian poem, "The Great Cycle." Written in a spiral, as a single German word, it translates roughly as follows: "They travel to the pulse of the wheel and music that turns at the heart of space as they leave and return and leave and return to the beat of the wheel as it turns as they travel." Interpretations of this poem vary, but most agree it concerns a regular cycle of visits to the Earth.

The Core Clue for this scene is the location of the creatures themselves. If the Investigators have a plausible idea for tracing the creatures, whether it stems from the library or not, allow it to work, giving them a suitably adapted version of this clue.

The following example clues, then, explain how various methods might successively locate the creatures. First, and most simply, the Investigators might use Library Use to locate the creatures from within Brichester Library. Second, Geology might similarly locate the creatures. The wording for these first clues is similar and can be adapted to various skills.

"Widerkehrenderuniversumszentrumrhythmusmusikherundhintanzendereisender"

The third and fourth examples show how other methods might locate the creatures. The third example assumes the Investigator uses a cloud chamber and Physics skill. The fourth example assumes an Investigator is trying to drive after the creatures and, quite unusually, uses Driving as an Investigation skill.

It is even possible the Investigators find a plausible way of locating the creatures without going to the Old Library—that is, skipping this scene. If this happens, proceed directly to "The Road To Rydal," below, but hint that a return to the Old Library may be useful later.

8. Core Clue: The creatures come from near Rydal, in the English Lake District.

- **Library Use:** Beside the main body of the Folklore Archive are new documents, waiting to be filed. One of them is a small badly-printed journal, the *Minutes Of The Penrith Convocation*, from earlier this year. It contains a recent report on "black birds of unknown species" in Rydal, in the Lake District.
- **Geology:** Beside the Geology Section of the library are new documents, waiting to be filed. One of them is a small badly-printed journal, the *Minutes Of The Penrith Geology Society,* from earlier this year. It contains a recent report on "rock samples showing pulsating phosphoresence", which were taken from Rydal, in the Lake District.
- **Physics:** You negotiate the occasional use of a cloud chamber from the Physics department. As predicted, you see the strange tracks when the creatures are present. However, after much observation, you see similar but weaker tracks when they are absent. By comparing your results from those obtained in London, you are able to triangulate the origin of these weaker tracks. They appear to centre around Rydal, in the Lake District.
- **Driving:** The next time the creatures fly away, you jump in the car and follow, at top speed. You reach the countryside before they disappear over the horizon. Sure enough, they return within hours, and you follow again as they depart. They depart to the northwest; accordingly, you drive a few hours in that direction, arriving at Preston when they return to watch again. Your chase continues for the rest of the day and most of the night, until eventually, you track them to the Lake District, in the hills near Rydal.

The Road to Rydal

Scene Type: Travel

In these winter months, the Lake District seems unnaturally dark, a state of twilight persisting throughout the day. The rain seems neverending, relentlessly beating down, while the sun is only occasionally glimpsed, weak and low in the sky. The hills are dark and alien, while the lakes appear unnaturally deep and silent.

The Lake District is remote. Remind the Investigators, before they leave, to tell someone (probably a Source of Stability) where they are going. Those of Credit Rating 4 or higher likely drive, taking five hours from London or four from Brichester. Others take the train, perhaps attempting to dodge payment if their funds are not sufficient. This rail journey takes approximately one hour longer, includes cold waits on the platforms of Birmingham and Oxenholme stations, and brings the Investigators to Windermere station, leaving a 15-minute bus ride to Rydal. On this bus ride, they are the only passengers.

As the Investigators approach Rydal, they are observed, the bird-like creatures staring from every tree they pass. In sight of Rydal, a dilapidated farming community on the edge of Rydal Water, they round a corner, and drive into a flock of sheep. Investigators who are driving must make a Sense Trouble or Drive check (Difficulty 5) to avoid hitting a sheep, while bus passengers may make a Sense Trouble check to warn the driver in time. If the Investigators arrive separately, only the first must roll; all others arrive on the scene shortly afterward, by which time the sheep's fate will have been decided. Here, assume that cars arrive before buses; if there is more than one car, the Investigator with the highest Drive pool is the one to roll.

Whether or not the sheep was hit, the way is temporarily blocked. The sheep are driven by Nasmyth, a surly and malodorous farmer. Banging on vehicle windows, he berates the drivers for their driving and the Investigators for being strangers to the area. After a minute or so of his growling, it becomes clear *he has the same tic as Kale.* When he is angriest, his head twists to the side, and he makes an involuntary hissing noise with lips and teeth. Naturally, he becomes particularly angry if Investigators call this to his attention.

Those in a hurry miss the following clues, although assiduous Investigators may linger to find them.

1. Dead sheep have some anatomical peculiarities that are similar to those of the dissected creatures, although not as exaggerated.

- **Biology:** There is something wrong with these sheep. Although their bodies are generally as they should be, pieces of their anatomy are not. One, for example, has a large bird's claw instead of a foot; another has distinctly avian eyes. You again find signs of the fungal matter binding pieces of the anatomy together.
- **Simple Search** (Dissection): As you slice into the sheep's brain, the black half-liquid matter oozes out, and the stench of mould fills the air.

2. Nasmyth's tic has developed within the past year. Others in the village share this tic.

- **Intimidation:** Nasmyth glowers at you. "'Tain't none of your business," he says, "You ask the other folk. I'm not the only one. Came on in the past year, it did."
- **Medicine**: "I don't need no doctor," growls Nasmyth. "It ain't a disease. Some of the folk in the village have it. Started in the past year."

There is no core clue for this scene. When Nasmyth has finished talking, he continues to drive his sheep. After several minutes, he takes them into a field, and the road is again clear. The Investigators may proceed to Rydal.

Rydal

Scene Type: Core

Rydal itself is a dilapidated farming community, its buildings grey with dirty whitewash. It consists of little more than an inn, a church and a collection of houses.

The inn is named The Green Man, as illustrated by a faded sign outside. Inside, it is dark, the locals secluded in corners and barely visible. It is run by Dunn, a former miner, who initially refuses to serve anyone of **Credit Rating** 3 or higher. To these Investigators, a point of an appropriate skill gains the dubious benefit of being able to buy a beer for sixpence. Suitable skills here include **Geology**, to converse about mining; **Streetwise** to get Dunn's attention; or **Intimidation** to get his respect. Dunn also rents rooms for six shillings per night, even to those to whom he will not serve drinks.

All the men in the village will, at some point during the evening, visit the pub. Father Vincent, the vicar of St Paul's Church, habitually drinks a half of bitter at the bar each evening—holding it in his left hand, because his right hand is deformed. Derrick Rawlings, a farmer, sits staring into the fire, making each whisky last an hour. Nasmyth enters later and skulks at the end of the bar with a pint.

The following clues are available, either from the inn's denizens or whatever other means the Investigators invent.

1. Strange chanting has been heard, late at night.

- **Oral History:** You buy Derrick Rawlings a whisky, making your offer seem casual, and timing it carefully to coincide with his finishing the last. After a few minutes, you ask if you can join him by the fire. You leave a period of silence, then reminisce. He responds in kind, with childhood memories of climbing in the nearby hills. After an hour or so, he mentions something interesting: he is often awakened, around midnight, by a strange chanting, although he cannot pinpoint the source.
- **Streetwise**: Once you use suitably foul language, Dunn becomes a little warmer, even laughing the first time you swear: "Thought you was one of them posh buggers." Over the course of the evening, he talks to you occasionally, although you learn little. Indeed, his most telling comment comes before he gives Last Orders: "Right, I'd better get this lot out and me off to bed. Not that I'll get any sleep if them buggers are doing that chanting all night".

2. Ravens have been tearing each other apart in the streets.

- **Theology:** You engage Father Vincent in conversation, debating some of the finer points of Biblical interpretation. When you reach the subject of animals, he mentions the local birds, wondering whether they are entirely natural. Suddenly, he breaks off, and looks out of the window. "Now there you are," he says, and points to two ravens fighting. As you watch, one tears the other apart, eviscerating it completely.
- **Reassurance:** Derrick Rawlings is reticent at first, but later opens up. He talks, for a while, about the local birds, agreeing there is "something wrong" about them. "You watch how they fight," he says, and points at you. Later, in your room, you observe such a fight

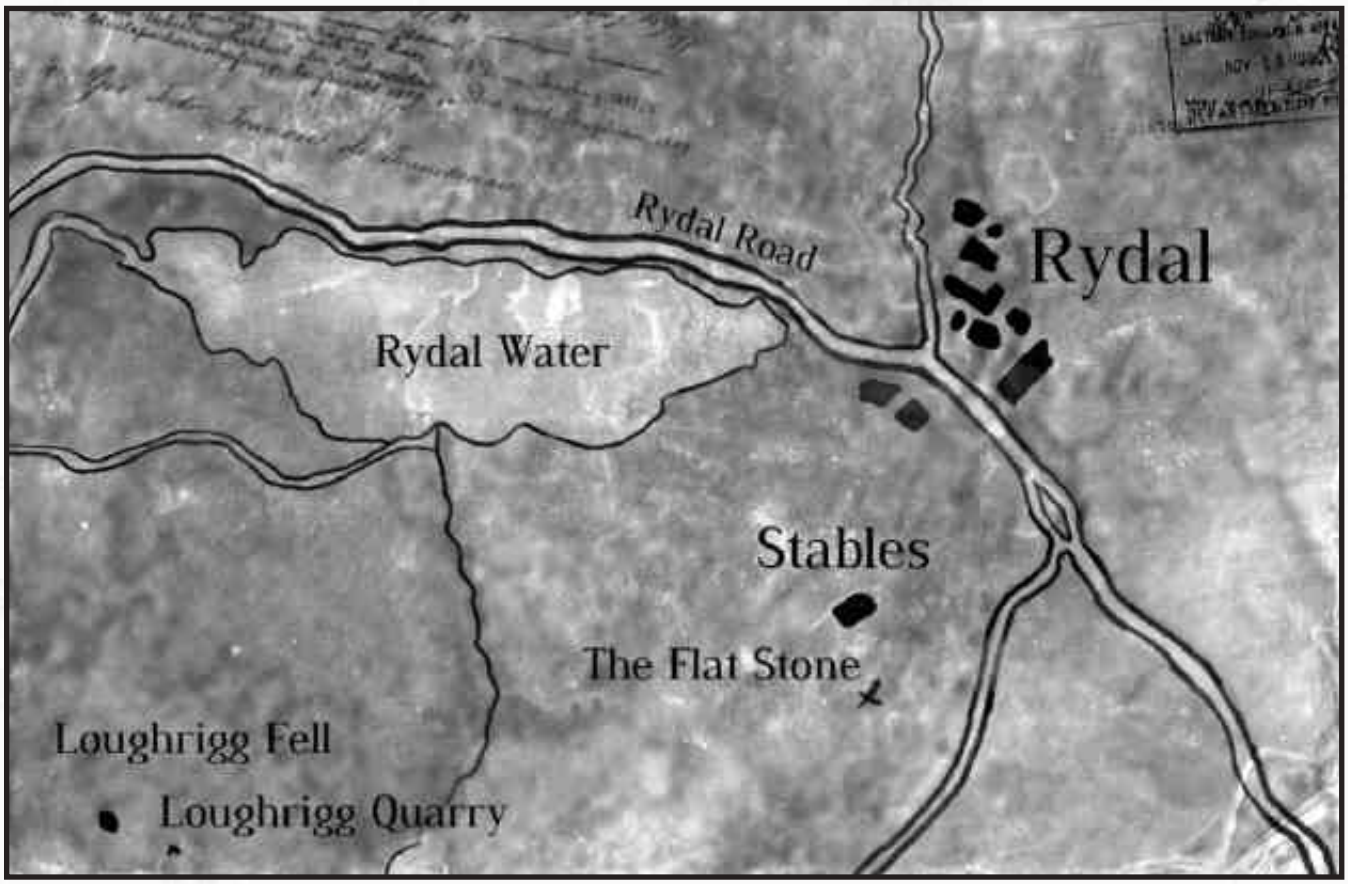

from your window. The birds fight mercilessly, until one rips the other to shreds, eating the remains.

3. Father Vincent's wife committed suicide, two years ago, by slashing her wrists in the woods. There have been other such suicides in the town's history.

- **Oral History:** During his third whiskey, Derrick Rawlings becomes loquacious, explaining the local history. Much of his story is inconsequential, although a story of a young woman committing suicide at the turn of the 18th Century is interesting. Slightly tipsy, Rawlings leans in close. "And exactly the same thing happened to the Father's wife," he says. It emerges Father Vincent's wife died by slashing her wrists in the nearby woods.
- **Credit Rating:** Assuming a more refined voice than usual, you bully Dunn for information. Eventually, he warns you against inquisitiveness. "And don't you go bothering the Father," he says, "He's had enough trouble, what with his wife doing herself in. Took a razor to her wrists in the woods."

4. Some nights, an ochre-yellow light bathes the sky above the woods.

- **Oral History:** You swap farming stories with Derrick Rawlings. By the time you quote the old rhyme of "Red sky at night, shepherd's delight," however, he frowns. "What about a yellow light, though?" he says, "Don't say nothing about that, do they? You watch. A darkish yellow light, late at night."
- **Flattery**: Buying Father Vincent another drink, you affect being impressed by his intelligence. Keeping your flattery subtle, he eventually succumbs. "Ah, there are limits to what even a man of the cloth knows," he laughs. "There's a yellow light at night, a dark yellow, like ochre. Now, that doesn't look godly to me, nor man-made, and I can't explain it."

5. Derrick Rawlings is growing a beard. This is because he has mislaid his razor, which was left to him by his grandfather.

- **Reassurance:** Questioning Derrick Rawlings is not a success. He looks blank when you mention the creatures, giving only monosyllabic answers. Finally, in an attempt to tell you something of interest, he mentions he has lost

his razor. It was bone-handled and monogrammed, given to him by his grandfather. He is sad about this and, with two days' growth of beard, feels scruffy. Later, Dunn tells you to ignore this: "He's always losing it."

- **Credit Rating:** Although Dunn is suspicious of "posh folks," he appreciates your money, especially when you buy an old bottle of wine from behind the bar and tell him to keep the change. He introduces you briefly to the pub's regulars, apologising for Derrick Rawlings' appearance. "He's lost his razor again," he says. "His grandfather gave it him. He's not happy about it."

6. The creatures return every four generations.

- **Biology:** You ask Derrick Rawlings about the creatures. Agreeing they are unnatural, he mentions they arrived within the last few months. Strangely, he mentions an old family story that his great-grandfather had seen similar creatures, "cobbled together" from parts of others, although they appeared crustacean rather than avian. There were rumours, too, of creatures four generations previously.
- **Reassurance:** At the mention of the creatures, Father Vincent looks confused. He mentions something about the parish records and, after some persuasion, agrees to show you them. Indeed, in 1816, the incumbent priest writes of "strange creatures, unnatural in the sight of God." The records do not go back much further, although Father Vincent shows you graffiti at the back of the church, dating from many generations before, depicting strangely assembled creatures.

7. Many gravestones in the St Paul's churchyard are dated 1697 and are of young women.

- **Oral History:** Dunn leans conspiratorially toward you. "And I'll tell you another thing. See that church? Look at the gravestones. 1697. That's all I'm saying. And all young women." Later, you wander out of the pub to check the stones with your flashlight. Indeed, many young women died in the year 1697.

8 Core Clue: People have been seen in the old stables at midnight.

- **Reassurance:** Derrick Rawlings looks nervous and you wonder if there is a subject he is avoiding. You ease off the questioning, then casually reassure him that the conversation is between yourselves. Later, you question him gently. "The stables," he says, "They go to the old stables at midnight. You'll see." He downs the last of his whisky and leaves the pub.
- **Streetwise:** Dunn eventually acquiesces and joins you in a drink. He tells you little about the village, but mentions the stables, on which you question him. "I'm not one to tell stories," he says, "but you go there and you see for yourself. Midnight. You'll see them there. That's all I'm saying."

The Room on the Right

Scene Type: Floating

In the small hours of the morning, before dawn, the inn's telephone rings. It is loud enough to wake those sleeping, although Dunn ignores it. If answered, the voice on the other end is Nurse Rodgers, of St Mary Bethelem Hospital. Kale, she says, is dying, and has an important message for those that know him.

The journey back to St Mary Bethlehem takes several hours. Neither Nurse Rodgers nor Dr Bateman are on duty, but Nurse Wilkie is. She is busy and flustered, however, and hastily directs the Investigators to the basement, to the first room on the right. Stone steps lead to this basement, which is dimly lit. The room on the right is unmarked and, again, dimly lit.

In the room, Kale lies on a bed. Investigators whose Stability is less than zero hear him call, almost inaudibly, or see him beckon. As the Investigators draw closer, they see his chest is open, exposing his rib cage. An overhead lamp, still warm from earlier use, can be turned on to illuminate the scene. Kale is, of course, dead. It is clearly him, since his shattered hand is visible, and this is his post-mortem. If Kale is a Source of Stability, this leads to a 5-point Stability check; if not, a 3-point Stability check.

3/5

The pathologist, Dr Jeremy Colfe, interrupts the investigators. Initially, he tells them to get out; quickly, however, he calms down, and is willing to discuss Kale. A point spend from an appropriate skill (perhaps Medicine, Intimidation or Credit Rating) may be used to access the body directly. Nurse Wilkie, too, is willing to talk and let the Investigators inspect Kale's room. If asked why she directed the Investigators to the post-mortem room, she explains she had thought they were undertakers or doctors.

Of course, this scene may play out rather differently. If Investigators covered their tracks, so they could not be traced to The Green Man, there is no telephone call. Similarly, if the Investigators stay elsewhere, they may be unable to receive a call. If they miss the call, the Investigators merely see Kale's obituary in *The Times.* They may still visit the post-mortem room, but his death will not be a surprise.

From various sources, the following clues are available.

1. There is a black substance in Kale's brain, identical to that in the brains of the creatures.

- **Medicine:** As you cut into the superolateral orbital craniotomy incision line, the black liquid bubbles out, more of it than you have ever seen before, spurting over your hand. The pathology room fills with its sweet, mouldy smell.
- **Credit Rating:** You direct Dr Colfe to cut into the brain. He does so, then stands frozen. You ask him what is wrong, but he does not respond. The room fills with the smell of sweet mould. Edging around him, you see he is staring at his hands, now covered in the black liquid.

2. Kale believed the creatures have lived under the earth since prehistoric times.

- **Geology:** Strangely, Kale's room contains a book you recognise, *Variegated Strata of the Cretaceous Era,* a textbook of dubious merit. Kale has annotated it extensively and madly, adding drawings of the creatures. In his interpretation of the fossil record, the creatures have been present on the Earth since prehistoric times.
- **Reassurance:** Nurse Wilkie is pale and distracted. Sitting her down with a cup of tea, you ask about Kale's final moments in the hospital. She appears frightened, and explains he had become obsessed with the birds, explaining that the "creatures" had been here "since before the Dawn of Man, since before the Dinosaurs, since the Sun was dark and lifeless."

Again, there is no core clue, and the Investigators are expected simply to return to Rydal.

The Moving Hand

Scene Type: Antagonist Reaction

Against their will, the Investigators' hands begin to draw the spiralling star symbol. As Keeper, you may choose when this phenomenon shows itself, but it is particularly appropriate if an Investigator is alone, and especially if they write something.

3

Here are some examples of how this might occur in the game. In the first two examples, a player has told the Keeper they are writing something: a chalk mark, to prevent getting lost, or a journal entry. In both cases, the Keeper uses the opportunity to take control of their hands. In the third example, the Keeper announces the drawing of the symbol when the Investigator is alone, although they have not chosen to write.

- As the mining tunnel deepens, you mark the wall with chalk, so that you can find your way back. However, something feels wrong, and your eyes are drawn back to the mark you have made. Without thinking, you have drawn a strange spiralling star shape—the same shape the birds formed as they flew overhead.
- In your cramped room in the Green Man, you take out your journal. You lose yourself in writing the day's events, the words flowing without thinking. After an hour, you turn back the pages to read back what you have written. On the third page is a symbol, which you have no memory of drawing. It is the spiralling star symbol, the same shape as the birds made when they flew overhead.
- Derrick Rawlings rises, leaving you alone by the fire in the Green Man. You look first into the flames, then at the last of your whisky. The glass is moving. Indeed, your hand is moving, and you are scratching the table with the glass. As you watch, your scratching forms a pattern—a spiralling star shape, exactly like the pattern formed by the birds as they flew overhead.

A **Scuffling** check, against a Difficulty Number of 6, allows an Investigator to restrain themselves from writing. Other Investigators may assist, using the normal rules for assisting. The urge to write lasts approximately a minute, before fading.

Use this episode twice or three times; if repeated more, it starts to lose its effect.

The Razor and the Stone

Scene Type: Antagonist Reaction

Father Vincent lives in a small house adjacent to St Paul's church, with his sixteen-year-old daughter, Alice. She has stolen Derrick Rawlings' cut-throat razor, which she now keeps under her bed. One midnight, she dresses in her best clothes, which she normally only wears on Sundays. Taking the razor, she walks into the woods. Serendipitously, an Investigator sees her leaving, perhaps from the inn window.

What happens next depends on the Investigators. If they do not interfere, she walks to the flat stone in the woods and cuts her wrists. As she bleeds to death, her blood runs along the carvings on the stone. It soon disappears, the stone absorbing the blood as if porous.

A point of a suitable skill, such as **Reassurance**, makes Alice stop and talk. She reveals one of the clues below. She has the same tic as Kale and Nasmyth. After talking, she promises to return to bed, although **Assess Honesty** reveals she is lying. She intends simply to return to her room, wait an hour, then go to the woods and kill herself. Another skill point stops her plans of suicide entirely.

Alternatively, the Investigators might chase her. Run this as a Contest, her **Fleeing** against the Investigators' **Athletics**. Use the generic statistics given under "Cast of Characters," above. Additionally or instead, they might physically restrain her (her **Scuffling** against the Investigators' **Scuffling**). Alice will not attack. If the Investigators lose either Contest, Alice runs ahead and commits suicide.

Most of the following clues are available either from Alice directly or, after her suicide, from her father or her diaries, which she keeps hidden inside her pillow. The last clue, of course, is only available by dissecting Alice.

1. Alice believes that the creatures can, at will, control her actions.

- **Reassurance:** Alice stares at you blankly, her voice shaking as she speaks. "I can't help it. They're making me go. The creatures. I can't stop them."
- **Evidence Collection:** Your systematic search of Alice's room reveals a diary, hidden inside her pillow. It is filled with drawings of the now-familiar spiralling star shape. In the diary, she writes of an unhappy life, believing she is controlled by the creatures: "They can make me do what they want."

2. She believes they came to the Earth, first from elsewhere in the Solar System, and previously from the depths of space. They will soon leave. They visit according to the "Great Cosmic Cycle."

- **Simple Search:** You search inside Alice's pillow, finding a diary hidden inside the pillowcase. One entry particularly intrigues you. Inside a large spiral shape, she writes of the creatures' journey from the depths of space, to the outer Solar System, and finally to Earth. They will leave soon, but return according to the "Great Cosmic Cycle."
- **Reassurance:** Father Vincent sits on the sofa, nearly motionless, his words coming out without feeling. "She talked about such strange things, things I didn't understand," he says. "There were creatures, travelling through space. First they arrived elsewhere in the Solar System, then they came here. She kept talking about a 'cycle'—a Cosmic Cycle? They visit the Earth and leave again."

3. There is a black substance in Alice's brain, identical to that in the brains of the creatures.

- **Biology**: As you cut into Alice's skull, the familiar black liquid flows out, dripping on to the flat stone. It lingers a while, then soaks away into the stone.

Again, there is no core clue for this scene.

The Old Stables

Scene Type: Core

At midnight—not every midnight, but on the night the Investigators happen to be there—the cultists meet in the old stables. The stables are overgrown, the grass growing through the paving slabs, the buildings crumbling as tree roots push them apart. If the Investigators wish to hide and observe, they may do so without fear of being noticed.

There are eight cultists, including Nasmyth. They form a circle in the courtyard, their faces covered. They chant, in Latin, while an animal is spreadeagled and restrained. Using kitchen knives, they slit the animal's throat, and watch as it bleeds to death. By now, their chanting has turned into singing, their thin voices carrying in the night air. An ochre light begins to bathe the sky, emanating from the surrounding area, but without an exact source.

The birdlike creatures now begin to gather on the stable roofs. If the Investigators are there also, the creatures ignore them, but do not perch near them. As the creatures watch, each cultist slices a piece from the dying animal and eats it. They take a second slice, feeding it to another cultist. A third slice is thrown upwards, to be consumed by the creatures. The cultists remove their bloody clothes and copulate as the creatures watch. When this is over, the creatures simultaneously take to the sky, while the cultists depart in silence, returning to their homes.

If the Investigators approach the cultists, at any time, their reaction resembles that of someone woken while sleepwalking. Hence, if approached before the ritual, they do not know why they are walking in the woods. If approached during the ritual, they realise, with horror, what they are doing; they may flee, scream or cry. Afterward, they do not remember walking in the woods, and are secretly appalled at waking covered in blood—although, of course, it has happened before.

The following clues are available:

1. The ritual is not occult in nature, but a strange amalgam of half-remembered church services, nursery rhymes and football chants. It has no discernable purpose.

- **Occult:** This ritual is like no occult ritual you have encountered. In fact, you are gradually sure that it is simply not occult. It is something far stranger—an incoherent mix of church rituals, nursery rhymes and dance steps. At one point, the cultists dance in a circle, holding hands, before falling down, as in the nursery rhyme "Ring-a-ring-a-roses." Later, they cross themselves. It is a meaningless jumble of other rituals.
- **Theology:** The rituals remind you of Church rituals, but from various denominations, and jumbled together, without any sense. At one point, the cultists genuflect, before dancing around in a circle. Later, they chant the Nicene Creed while stamping. It is blasphemous and meaningless. More oddly still, it contains elements of nursery rhymes and football chants.
- **Anthropology:** This ritual is not a local one, but a jumble of misunderstood nursery rhymes and Church rituals. Indeed, as you watch, you cannot understand how it could have developed. You can explain it best with an analogy. If a uncomprehending watcher took elements from group activities and threw them together blindly, you might get this ritual.

2. The ochre light is an unexplained astronomical event, seen occasionally for a few months, at intervals of just over a century.

- **Astronomy:** When you return to The Green Man, a call to a colleague confirms your suspicion. This ochre light is a known astronomical oddity, normally reported by amateur astronomers in remote areas. In every recent century but the 18th, it appears occasionally for a few weeks, always at midnight.
- **Occult**: You remember mention of an ochre light in one of the more obscure publications to which you subscribe. It is mentioned in letters at the beginning of the 19th Century, assumed to be a manifestation of a ghost. There are mentions of similar phenomena, always in remote areas, occurring for a few consecutive weeks in every recent century (except, for some reason, the 18th).

3. Core clue: The birds roost under a strange, flat, engraved stone in the woods.

- **Reassurance:** Calming the cultist, you ask where the creatures came from. She points, wordlessly, into the woods, before fleeing. Following the direction of her hand, you find a clearing. At the centre of the clearing is a stone.
- **Outdoorsman:** As the birds fly off, you follow. Although you do not know the woods, you are quick to move through them, almost keeping up with the birds. You lose sight of them as you enter a clearing. The birds have disappeared. In front of you is a strange, flat stone.

The Flat Stone

Scene Type: Core

The stone lies in a clearing in the woods south of Rydal. Approximately ten feet in diameter, it is silver-grey, almost metallic. It is engraved with drawings, with Aramaic script around the outside. It is deeply embedded, too heavy to lift and impervious to any damage the Investigators can wreak. Tunnelling around the stone is impractical.

Whenever the Investigators are near the stone, the creatures alight on the trees surrounding the clearing, silently staring.

The following clues are available.

1. The type of stone is unknown. It is heavy, hard and porous.

- **Geology**: Whatever this thing is, it is hard, heavy and strangely porous. However, you are certain it is not a stone. It resembles no stone you have ever seen. It is not metal, either. You cannot explain what this substance is.
- **Explosives** (used as an Investigative skill): No rock could have withstood the amount of gelignite you just detonated. Indeed, the stone appears unharmed, even completely unmarked. This stone is not natural.

3

2. The drawings show a race, looking more like wasps than birds, arriving in our Solar System from the stars.

- **Astronomy**: You recognise the drawings in the stone as a map of the stars, although some of the stars are oddly positioned, as if the drawings were made when the stars were differently placed. A journey is depicted: misshapen creatures, looking more wasp-like than avian, arrive from the stars. First they come to another planet in the Solar System, although it is difficult to tell which, before coming to Earth.
- **Anthropology:** The drawings are not dissimilar to cave paintings, although intricate and intelligently drawn. They depict a journey. A race of misshapen creatures, more like wasps than birds, arrive from the stars. They arrive in the Solar System—not on Earth, but on another planet, although the drawings do not identify which. Finally, they come to Earth.

3. Although it shows little wear, the stone has existed for hundreds of years, perhaps longer.

- **Oral History:** Back at The Green Man, Derrick Rawlings is glad to talk about the stone. It has been there for years, he says. His grandfather said it had been there in *his* grandfather's time. The rumours are that it has been there for hundreds of years.
- **Locksmith:** In the vestry of St Paul's, you find the Parish Records. You find a mention of the stone in the earliest records, around the beginning of the 19th Century, referring to it as the "old stone." Another entry suggests it has been there for centuries.

4. Core Clue: The area beneath the stone can be reached through the abandoned quarry in Loughrigg Fell.

- **Outdoorsman**: You look at the outline of the hills, noticing a man-made cut to the south. It is probably a quarry. If they have tunnelled into the hill, there might be a way to get to the area beneath the stone.
- **Geology:** The stone is embedded in the slate hillside. A thought occurs to you. Slate is mined heavily in this area; perhaps the area beneath the stone is accessible through mining tunnels. Indeed, looking around, there appears to be a quarry to the south.

Loughrigg Quarry

Scene Type: Core

In the side of Loughrigg Fell, the hill overlooking Rydal Water, is an abandoned quarry. Mining tunnels lead into the rock, toward and under the flat stone. They are dark, scattered with abandoned mining carts and rusty pieces of track. What are the Investigators using to light their way? How likely are they to drop it if startled? Ask the players the first question; keep the second question for yourself.

Soon, the tunnels interact with a cave system. Here, the air smells of rotting meat, and gusts rhythmically back and forth, as if pumped through the tunnels. In the first cave is one of the creatures, dead and rotten. Instead of claws, it has miniature human hands, and the right hand is deformed, like that of Father Vincent in Rydal village. It is assumed, here, the Investigators notice these deformities; if they do not, call them to their attention.

3

The caves lead deeper. In these deeper caves, the air smells more rotten and the Investigators pass an occasional creature, live and asleep. Here, the floor is littered with discarded corpses of malformed creatures, rotted and torn apart. They are sickening in their unnaturalness; many have multiple heads, many the wrong number of wings. The wings and rib cages are based on human hands—yet strangely, these duplicated hands appear to be those of Kale, for the bones are clearly

shattered. As above, the amount of Stability at risk depends on whether Kale is a Source of Stability.

3/5

As the Investigators explore, the following clues are available.

1. The caves are unimaginably deep.

- **Occult**: You have met with Hollow Earth Theorists and, up until now, had dismissed them as cranks. However, these caves make you wonder. They lead astonishingly deep. Every now and then, there is a gust of a mouldly subterranean stench, especially from the vertical shafts, that seems not quite natural.
- **Geology**: The structure of the cave system worries you. Normally, you would expect some degree of levelling out, as the caves get deeper. However, these caves seem only to go deeper. Occasionally, you pass a vertical shaft, heading straight downwards, not man-made but yet not natural. You wonder how much further these caves go down.

2. The reason the air moves rhythmically is that the birds breathe in unison.

- **Biology**: Beyond the nature of the creatures themselves, there is something unnatural about them. Eventually it dawns on you—they are breathing, but in unison. Indeed, that would explain the wind, that gusts rhythmically, back and forth, through the caves.
- **Physics**: To keep your mind from dwelling on the horrors, you focus on the wind. How could wind gust back and forth, as it does, to such a strict rhythm? It would suggest a pair of huge bellows, somewhere deep, or perhaps a large creature breathing. The answer eventually comes to you—it is not one creature breathing, but the misshapen bird creatures. Without exception, they breathe in unison.

3

3. Core Clue: In the discarded corpses, the Investigators see the physical deformities of their Sources of Stability. Use the same deformities you referenced in the Prologue, Those Left Behind, described above.

- **Simple Search:** One of the corpses comes apart, under your feet, the rotten flesh sliding apart like butter. The rib cage catches your eye. It is made of human fingers—indeed, on closer examination, it is made of little fingers. Disturbingly, just like those of Lucinda, *every one of the little fingers is slightly bent*.
- **Biology**: The corpse hardly needs dissecting. As you try to pick it up, the stinking flesh slides away from the bone, like overcooked chicken. You look at the flesh, steeling yourself. You have picked up the claw, which appears to be made of human fingers. They are all human ring fingers and, like those of your wife, the *base of each ring finger is swollen*. The more you look, the more you are convinced that the fingers are precise clones of your wife's ring finger.
- **Simple Search:** The pile of corpses reeks of rotten flesh. Indeed, some are so rotten that the skeleton is visible. In one particular old corpse, the wing is rotted through, revealing it to be made of human ribs. You wonder, for a moment, why you are sure they are ribs. Then you realise *each rib is cracked,* precisely like those of your fiancé.

5

Ask the players how their Investigators react to this. Do they run? Do they fight the creatures? Do they drop to the floor and despair? Even now, they do not know the whole truth. Have they infected their loved ones? Are they doomed?

After a brief moment of reaction, the Investigators notice something different about the caves. Something is wrong. Something sounds wrong. Ask them for a **Sense Trouble** roll, Difficulty Number 4. If they succeed, the Investigators notice the air has stopped moving. The creatures have stopped breathing in unison. Their eyes are open. They are awake.

The Chase

Scene Type: Antagonist Reaction

All around the caves, the creatures awake. There are hundreds of them, thousands, an unimaginable number. They fly directly at the Investigators.

7

Now, how did the Investigators light their way? Whatever they used to do so, they may drop it. Ask for a Sense Trouble roll, difficulty 5, allowing the Investigators to substitute any other plausible skill (perhaps **Preparedness**, ensuring they remembered to wind the strap of the lantern around their wrist). At your discretion, a point spend of a suitable Investigative skill, such as

Outdoorsman, may negate the need for the roll. If they fail, they drop their source of light. A kerosene lantern shatters immediately. A flashlight rolls on the ground and may be grabbed with a successful **Athletics** roll, difficulty 5; failure means the flashlight falls deeper into the caves and is unrecoverable. If the Investigators are left in the dark, a point spend of a suitable skill (**Outdoorsman**, **Geology**) lets them navigate blindly.

If the Investigators made the **Sense Trouble** roll, above, to notice the air stopping moving, they act first in any contested roll that follows. Otherwise, the creatures act first.

From now on, think about stories rather than mechanics. If you or a player see a good moment to end the story for an Investigator, end it, without worrying about the rules. For example, if a player is content to leave her Investigator fighting hopelessly against the creatures, end her story there, without rolling dice for combat. In particular, if you are using the "1953" epilogue (below), the Investigator concerned must end the scene unconscious and separated from the others.

Indeed, fighting is probably futile. If you need to roll dice, allow the creatures to fight as a group, numbering ten creatures *for each Investigator*, each with these statistics:

Abilities: Weapons 3, Health 3
Hit threshold: 3
Weapon: +0 (beak)

If the Investigators succeed in the fight, they end the scenario deep within the caves, hearing other creatures awake in caves deeper still. Do the Investigators run for the surface? Do they plunge deeper into the caves, in a last and doomed fight?

It is preferable the Investigators flee. After all, this is the classic Lovecraftian ending—the protagonist chased by an unimaginably powerful force. If they do this, treat the flurry of creatures as a group, in a contest of the creatures' Athletics versus the Investigators' Fleeing.

Abilities: Athletics 10
Hit threshold: Not applicable (use alternate statistics above for combat)

If any Investigators fail, they remain in the caves, surrounded by the creatures. Ask them to briefly describe how this happens. After five rounds of the contest or when the creatures fail, the Investigators reach the surface. Shortly afterward, the creatures fly into the trees, where they watch the Investigators retreating or, perhaps, quietly going mad.

Three Epilogues

To end the adventure, set up one Directed Scene per investigator. For each scene, use one of the following epilogues, although you need not use them all.

The first, "Returning Home," sees the Investigators reuniting with their loved ones; if in doubt, use this for everyone. The second, "1953," is the reward for the first Investigator to go mad, but it requires a particular sort of player, as explained below. The third, "Bedlam," is suitable for one Investigator only, to be used at the player's discretion; it sees that Investigator taking Kale's place at St Mary Bethlehem hospital.

Use these epilogues in order. That is, complete all the "Returning Home" epilogues first, noting the special instructions for the last of these epilogues. If you are using the "1953" epilogue, do that next, then conclude with "Bedlam."

Returning Home

The Investigators return to their loved ones. This Directed Scene is an echo of the first scene with the Source of Stability. Whoever played the Source of Stability in that scene plays them again. They might refer to their physical deformity.

How do the Investigators react? Can they return to their loved ones? These scenes may be short, either a happy reunion or a troubled one.

For the final "Returning Home" epilogue, add one more complication. Whisper it to the player portraying the Source of Stability: the Source of Stability now has *the same tic as Kale.*

Here are examples of these scenes.

- Dr Parker is in the nursery again, looking at her daughter. As Lucinda grasps Dr Parker's hand, the bent little finger touches hers for a moment. Dr Parker looks closely at her daughter. Is it her imagination, or is there something strange behind Lucinda's eyes?
- It is breakfast time again and Professor Wright's wife is already seated at the table. This morning, she complains of a headache, and rubs her temple absently, as if trying to reach the source of the pain. As she describes her plans for the day, she seems distracted, as if her thinking is slower than usual.
- The nurses in St Thomas's hospital are surprised by the lack of progress of Miss Howell's fiancee, Mark. His broken rib, according to X-rays, is still broken. Nevertheless, Miss Howell sits, and tries to be supportive. Yet something is wrong with Mark's speech. As he talks, his head jerks to the side, and he makes a strange hissing noise with his teeth.

1953

This epilogue requires a player who enjoys being manipulated, and who you think will suspend disbelief and play along. With the wrong player, this epilogue will appear a cheap trick; with the right player, it works beautifully.

This Investigator ended the previous scene unconscious and alone—perhaps in the caves, while fighting off the creatures; perhaps in the woods, while running from them; perhaps somewhere else. When they wake, after an indeterminate time, the creatures are gone. The caves are empty. Perhaps they glimpse themselves in a puddle; they are bruised but otherwise appear unchanged and unharmed.

When the Investigator returns to Rydal, there is no sign of the other Investigators. Oddly, there is also no sign of anyone the Investigators met. The landlord of the The Green Man is not Dunn; the vicar of St Paul's Church is not Father Vincent; Derrick Rawlings no longer sits by the fire. Similarly, there is no sign of the Investigators' belongings or vehicles.

Ask the Investigator what they want to do next. If they choose to leave Rydal, they might catch the bus or demand someone take them by car. Whichever vehicle they take, it is oddly futuristic, almost like a spacecraft, although everyone but the Investigator thinks it normal. Strangest of all, if the Investigator takes it, is the train from Windermere Station, which emits no steam.

If the Investigator returns home, their home is occupied by strangers. If they return to their place of work, their office is similarly occupied by a stranger. Everywhere, things appear strangely futuristic, and eventually the truth dawns.

It is 1953, as proven by a copy of *The Times* newspaper. Nearly twenty years have passed, yet the Investigator appears no older. If they ask, they discover they have been missing for years, since disappearing in the Lake District. The survival of Sources of Stability and the other Investigators is at your discretion as Keeper.

Use discretion, too, in deciding when to reveal the truth. Probably the player will quickly realise what is happening, perhaps when you mention futuristic vehicles. If they then attempt to confirm their suspicions, perhaps by asking someone what year it is, draw the epilogue to a close. If the player plays along, feigning ignorance as their character returns home, choose an appropriate moment for the truth to dawn. When you think it right, let the Investigator see the copy of *The Times,* whose date acts as final proof. Give the player a moment to react, then end the epilogue.

Bedlam

One Investigator may end the scenario at St Mary Bethlehem Hospital. As Kale did, the Investigator sits on cast-iron furniture on the lawn, surrounded by birds hoping for food.

Keep this epilogue short. Ask a player to reprise their portrayal of Nurse Rodgers or Nurse Wilkie, offering the Investigator a cup of tea. Let the Investigator's player act out their madness before ending the scenario.

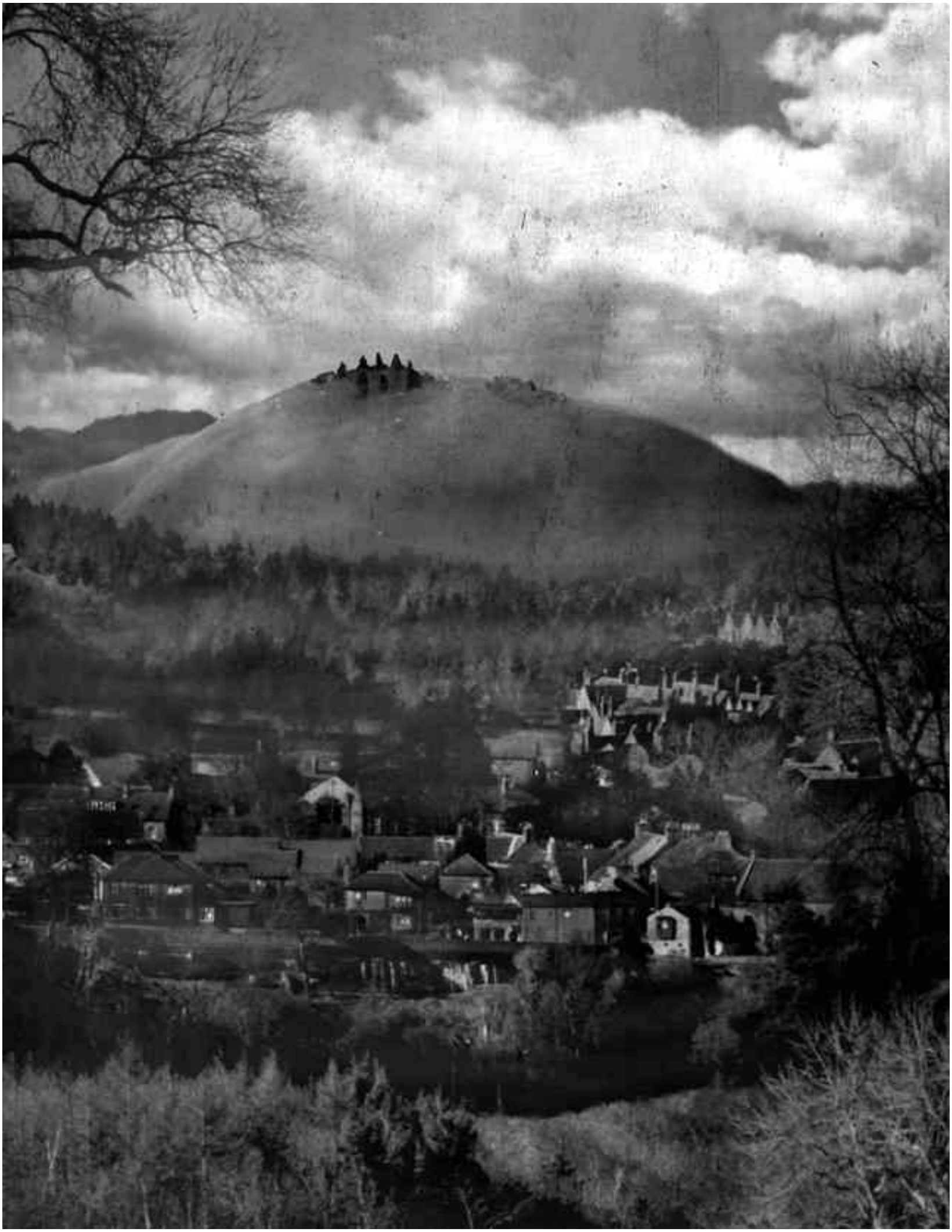

THE DANCE IN THE BLOOD

Introduction

In a forgotten, secluded place in the North of England lies a village of many secrets and terrors. When the Investigators find this village, they uncover a mystery that has killed many and doomed others.

The Dance in the Blood is the third Purist scenario for *The Final Revelation*. In the previous scenarios, there was little fighting and no hope of winning. All the Investigators could do was flee. Now the Investigators cannot even flee—because, as they discover, they are the monsters themselves.

If you are playing this scenario as part of *The Final Revelation* framing sequence, this episode is triggered in the section "Meeting 3: Change of Management," when the Investigators visit Cavendish's flat and look in the steamer trunk.

The Hook

In a hotel in the English Lake District, a group of strangers discover they are related. Although they did not know it, they were born in the nearby village of Manesty and adopted in early childhood.

The Horrible Truth

Beneath the Lake District, a race of monsters swims through the soil. They are wormlike, humanoid and loathsome. These creatures regard the land above as their own.

Every 119 years, when their power is greatest, they rise from the earth, tear apart the village and murder its inhabitants. They have done this many times. In 1697, they tore apart a village by the lake. In 1816, they tore apart the village built in its place. Now Manesty stands on their land. Soon they will tear it apart.

When the monsters are young, they live with the people of Manesty and appear human. Indeed, biologically, they *are* human; only later in life do they shed their skin, revealing their wormlike form.

More important, they *believe* they are human. Many leave Manesty to pursue lives elsewhere. When their time comes, however, they find a reason to return to Manesty. There they dream of a ritual they must perform—a dance that runs in their blood.

In Manesty itself is a dynasty of these monsters, the Wareing family. In 1895 Jack Wareing, one of the monsters, married Victoria, a human. Soon thereafter, Victoria gave birth to a new generation of monsters. These were the Investigators, plus one other, Geoffrey Wareing.

Eventually, by piecing together local folktales and the family's history, Victoria realised what her children were. She had them adopted, far away from Manesty, then committed suicide.

Years later, Jack remarried. Mary, his new wife, gave birth to twins—two new monsters.

Then Jack began to dream of his ancestry. Shortly afterward, when he realized what he was, he disappeared. He had been called to join his brethren under the earth.

Now it is time for the monsters to rise again and reclaim the land. The children of Jack Wareing have been called back to Manesty. There they will destroy the village and those who live in it. Those children, of course, are the Investigators.

Use the Family Tree handout on page 118 to keep track of the family tree. There are two versions. If you are using the sample Investigators, use the first one. If the players are creating their own Investigators, use the second, and fill in the Investigator's first names and birth years.

The Spine

The Investigators are staying in the Blackstone Hotel in Keswick, a town in the English Lake District. They do not know each other. However, they find a photograph of themselves, together, as children. Also in the photograph is Geoffrey, the brother of one Investigator, and an unknown man and woman.

When they investigate, they discover that the photograph shows the Wareings, a family who lives in Manesty. The Investigators discover themselves to be the Wareing children, adopted soon after birth.

Timeline

As the scenario progresses, the Investigators discover more of its backstory. To help them keep track, use the following timeline, which can also be found as a handout on page 117. Cut it into strips, one for each date. Then, as the Investigators discover facts, give the players the corresponding strip of the handout.

1697 The town by the lake, Lower Manesty, is destroyed. It is later rebuilt as Low Manesty.

1816 Low Manesty is destroyed. It is later rebuilt as Manesty, the village that now stands.

1870 Jack is born.

1900-1904 The Investigators are born.

1905 The Investigators are photographed as children. Also in the photograph are their parents, Jack and Victoria, and another child, Geoffrey.

1905 Victoria has the children adopted.

1905 Victoria commits suicide.

1925 Jack, now aged 55, marries Mary.

1929 Jack and Mary conceive the twins. Jack disappears.

1930 The twins, Lisa and Bethany, are born.

1935 The present day.

The Investigators begin to dream of a strange ritual: dancing on a hillside, within a stone circle, and performing a sacrifice with an ancient knife. Additionally, they notice all local radios emit static. Nevertheless, the local inhabitants seem to hear the radio as normal.

When the Investigators travel to Manesty, they find Geoffrey, who has drifted there for reasons he does not understand. His pulse has stopped and the skin is loosening around his fingertips.

Also in Manesty, the Investigators find Mary Wareing, Jack's estranged second wife. They then discover a secret haunt of Jack Wareing: the Maiden House, on a deserted moor.

At the Maiden House, the Investigators find Jack's old documents, which reveal his monstrous nature. In the upper rooms of the house they find the sacrificial knife that appeared in their dreams.

Soon afterward, Jack begins to talk to the Investigators through a radio in the Maiden House. He is now a monster, swimming beneath the earth. He encourages the Investigators to sacrifice Geoffrey. This will release his monstrous form, so he can join his brethren in the soil below.

In the final scene, Geoffrey and the Investigators feel themselves called to Castlerigg Stone Circle. Geoffrey's skin is splitting, revealing the monster beneath. The Investigators must choose whether to perform the sacrifice, releasing him, or leave him to die.

Although the backstory seems complex, it's simpler in play. There are two main facts for the Investigators to discover: they are related, and they are monsters. Essentially, that's all you need.

Sample Investigators

Here are five Investigators designed for The Dance in the Blood.

For each Investigator, their family name is their adopted name. At birth, their family name was Wareing. For example, Rosa Parker was born Rosa Wareing.

Similarly, where a Source of Stability is listed as a family member, they are a member of the adopted family. There is one exception: Michael Laws is genuinely Geoffrey Laws's brother. At birth, they were Michael and Geoffrey Wareing, and were then adopted by the Laws family.

[= Occupational ability]*

Rosa Parker

Concept: Spinster antiques dealer
Drive: Ennui
Occupation: Antiquarian
Sex: Female

Sources of Stability: Priscilla, my sister; Derek, the antiques dealer with whom I served my apprenticeship; Martha, the newsagent who lives near me.

Pillars of Sanity: Honesty is the best policy. Somebody will love me for what I am. Deep inside, I am a good person.

Investigative skills: Archaeology 2, Architecture* 2, History* 2, Library Use* 2, Assess Honesty 1, Bureaucracy 1, Credit Rating 3, Intimidation 2, Oral History 2, Evidence Collection 1.

General skills: Driving 5, Fleeing 5, Health 10, Sense Trouble 10, Preparedness 8, Stability 10, Firearms (shotgun) 10, Riding 5, Sanity 10.

It has been said you are a plain woman. This is perhaps true, although you resent being judged on that alone. You are also highly intelligent and, when someone gets to know you, loyal and loving. Yet what people remember is a large and brash woman. This saddens you.

You are a successful antiques dealer, living in Stroud in Gloucestershire. Your clientele consists of well-heeled locals, mostly middle-aged women, and knowledgeable collectors, who travel great distances to view your latest stock. As a woman in the backbiting world of antiquarians, you have become bullish and tenacious. Shouting in auctions has made you strident. You are conscious, too, of being a couple of rungs lower on the class ladder than your clients, which adds a defensiveness to your character.

Yet, despite your exterior, you are a deeply loving person. Your sister, Priscilla, is the dearest thing in your life. She lives in Cornwall and you communicate with her by letter and telephone. Your relationship with your mother, who lives with Priscilla, is also close.

Above all, you are proud of getting things done. You are in Keswick for an antiques fair, at which you expect to fight dealers down to bargain prices. When you know what you want, those who stand in your way are doomed to fail.

Dr Michael Laws

Concept: Extroverted hospital consultant
Drive: Thirst for Knowledge
Occupation: Doctor
Sex: Male

Sources of Stability: My brother, Geoffrey Laws; my mentor, Dr Parker; my wife, Cynthia.

Pillars of Sanity: I save lives. Humanity is essentially good. Being in the country makes me human again.

Investigative skills: Architecture 1, Biology* 1, History 1, Languages* 2, Library Use 2, Medicine* 2, Physics 1, Assess Honesty* 2, Bargain 1, Bureaucracy 2, Credit Rating 4, Flattery 1, Oral History 1, Reassurance* 2, Photography 1.

General skills: Athletics 10, Driving 10, Health 10, Scuffling 6, Stability 10, Firearms 10, First Aid* 10, Sanity 10.

Your work in medicine is an extension of your love for people. Admittedly, you have never been a bookish sort: you would claim to be academically competent rather than brilliant. Nevertheless, your bedside manner is excellent. You can put people at ease with a few words. That, you consider, is what makes you a great doctor, and you are quite frankly bloody good at your job.

Your love for humanity extends to those around you. Geoffrey, your brother, is a constant in your life. Cynthia is your greatest comfort, although you must admit you have not been entirely faithful. Nevertheless, you would do nothing to hurt those close to you.

Although you practice in London, you have come to Keswick for a welcome break away. Perhaps you will walk a little. Inevitably, you will haunt the bar! And one never knows whom one might meet. Perhaps you will find a young lady: that would certainly help the week pass pleasantly.

When you get back, you will see those you love. You must call Geoffrey; you have not seen him in a while. For the moment, though, your time is your own, and you intend to explore this area a little.

Jonesy (Tom)

Concept: Gentleman tramp
Drive: Duty
Occupation: Hobo
Sex: Male

Sources of Stability: Mrs Travis, an exceptionally kind old lady; my dear old mother, God bless her; Tiny, the other tramp in the library.

Pillars of Sanity: I'm British through and through. Everything will turn out all right in the end. I'll outlive you all.

Investigative skills: Archaeology 1, History 1, Library Use 2, Bargain* 2, Flattery 2, Intimidation 1, Oral History 2, Reassurance 2, Streetwise* 2, Art 1, Locksmith 1, Outdoorsman* 2,

General skills: Athletics* 10, Filch* 10, Health 10, Sense Trouble* 10, Preparedness 5, Scuffling 8, Stability 10, First Aid 5, Mechanical Repair 5, Sanity 10, Stealth 6

This really is the most delightful village. Absolutely delightful. Keswick, you say? What a splendiferous part of the world. One wonders whether it was Wordsworth that said that fresh air strengthens the soul.

You are Mr Jones, although you are commonly known as Jonesy, not that there is anything common about you! On the contrary! You consider yourself a gentleman. Although the bowler hat, coat and stick are undeniably tattered, they are of exceptionally good quality.

Now, to be frankly honest, your gentlemanliness is something of an affectation. You are from humble stock: your dear old mother, God bless her, is a seamstress in Canterbury. She even has a telephone these days, although you particularly have little occasion to telephone it. Your accent, too, is entirely affected and not entirely accurate, and your command of the English language is perhaps indeed not all that which it should be.

With all your affectation, however, you are proud to be English—and justly so! Justly so! You feel a duty to investigate anything remotely rum and report it within the purview of the proper authorities if that seems in the least appropriate in your considered opinion.

There not being anything rum in the immediate vicinity, however, you would be much obliged if someone would stand you a drink. Ordinarily you would pay yourself, but you find yourself a tad short at the moment. A gin-and-tonic-water would be delightful, if it is not too much trouble. How awfully kind.

Viscount Hilary Exeter

Concept: Socialite and dabbler
Drive: Arrogance
Occupation: Dilettante
Sex: Male

Not In the Blood

This scenario, as you may have realized, explores the Drive "In The Blood." No matter why the Investigators think they are in Keswick, they are actually here because they have been called through the blood.

However, the Investigators should not take In The Blood as a Drive. If they did, it would lessen the impact of the mystery. If the Investigators know strange behavior runs in their blood, they won't be surprised to discover their alien heritage.

Sources of Stability: My elder brother Marmy, a surgeon; my elder brother Perry, an archaeologist; my younger brother Jack, a priest.

Pillars of Sanity: My birthright. The finer things in life. I am biologically superior to the lower classes.

Investigative skills: Anthropology 1, Archaeology 2, Architecture 2, Biology 2, History 1, Library Use 1, Medicine 2, Occult Studies 2, Physics 1, Bargain 1, Credit Rating 6, Flattery 2, Intimidation 2, Oral History 2, Art 1

General skills: Athletics 10, Driving 10, Health 10, Scuffling 6, Stability 10, Firearms 10, Riding 10, Sanity 10

You really have no idea where the bloody hell you are. One moment, you were on a train to Glasgow with a couple of bottles of Moët. The next, you were… well, you presume you got off too early, then you got chucked off another train in the middle of nowhere and then you seem to recall a taxi. What the hell is this place? At least it has a bar. Small mercies, you suppose.

Although you think of yourself as a dilettante, you are, in reality, an unfocused brat. As the third eldest in your family, there were no particular expectations on your shoulders. Hence, believing your family name will see you through, you are content to drift between bars, women and card games.

Nevertheless, you have found time to study. Admittedly, you mainly studied so that you could argue with your brothers. When Marmaduke went into medicine, you were damned if you would let him beat you. You trained for a year, then dropped out, thereby gaining enough ammunition to shoot his arguments down. In a similar way, you learned about architecture to argue with Peregrine. No, hang on, archaeology, that was it. Damned confusing.

When your younger brother became a priest, you took a different tack: with no desire to master theological arguments, you read every blasphemous tract you could find. Although you do not win arguments with him, you stall these disputes by annoying him beyond belief.

All things considered, there is little to your life other than your family name. And since the sun is over the yardarm, it is time for a drink.

Helen Long

Concept: Tempestuous surreal artist
Drive: Artistic Sensitivity
Occupation: Artist
Sex: Female

Sources of Stability: Gloria, my mother in Chelsea; Julie St Clair, a fellow artist in Camden; Jack, the tramp who sleeps outside the building.

Pillars of Sanity: Art lies within the human soul. The city is my home. There is beauty in insanity.

Investigative skills: Architecture 2, Art History 2, Library Use 1, Assess Honesty 2, Bureaucracy 2, Credit Rating 3, Flattery 2, Intimidation 2, Oral History 1, Reassurance 1, Streetwise 1, Art 4, Photography 2.

General skills: Athletics 10, Driving 10, Filch 6, Health 10, Sense Trouble 5, Preparedness 5, Stability 10, Mechanical Repair 5, Sanity 10.

God knows why you agreed to come but you're here, in the Lake District, otherwise known as the *middle* of *bloody nowhere*. A client and admirer of your work sent you to Keswick, to paint the Lake District. He is paying for the hotel, so you can hardly complain.

Wait. Actually, no, you *can* complain. You're a bloody *artist*, after all. What is there here to inspire you? Bluebells? Meadows? What are you meant to do, paint watercolours? You're a *surreal* artist. You paint *nightmarish landscapes.* There's nothing nightmarish here, other than the *excruciating* boredom, and you can't paint that. You need something to inspire you. Something

dark, something twisted. And what do you get in Keswick? A bloody *pencil factory*.

You wish you were back in London. You should visit your mother, who is getting on a bit. Also, you feel an urgent need to get drunk with Julie, another artist, who is still trying to make Cubism work. Unless something interesting happens in the next few days, you're going to get the train straight back.

Creating Your Own Investigators

Alternately, allow players to create their own Investigators. Requirements:

- They are aged between 30 and 35.
- They do not know each other.
- They have different reasons to be in Keswick.
- They do not take the drive In The Blood (see sidebar nearby).
- Someone takes the **Medicine** ability.
- One has a brother called Geoffrey, preferably as a Source of Stability.

Some abilities are particularly useful within the scenario, particularly **Library Use, Physics, Archaeology** and **Art.** Others are not and should be avoided; these include **Art History, Cryptography, Law, Cop Talk, Chemistry** and **Pharmacy.** Although Investigators might have these abilities, they should have others more useful to the scenario.

Cast of Characters

Here are brief descriptions of the major characters in the scenario. Each description contains three things you can do, at the gaming table, to bring the character to life.

Statistics for these characters:

- **Abilities:** Fleeing 5, Health 5
- **Hit threshold:** 3
- **Weapon:** –3 (Fists, inexpertly used)

Nigel Jones, Barman of the Blackstone Hotel

Nigel does not like his job or the people he must deal with. He wants everyone in the bar to go away, so he can read his book. It is an Agatha Christie, *Murder on the Orient Express,* and he thinks he knows which suspect is the murderer. The last thing he wants is a disturbance: raised voices, people fainting, anything that looks like trouble. To portray Nigel:

- Mime pouring a drink
- Speak with bored calm
- Think "Shut up shut up shut up *shut up"* to yourself, when the players talk to you

Dr Henry Rochdale

Henry is an old, patient and brilliant doctor, who works at Keswick Hospital. To portray Dr Rochdale:

- Speak patiently, firmly and exactly
- Consult imaginary notes
- Pause, while you gather your thoughts

Mary

Mary is a quiet country woman who keeps herself to herself. Her husband left some years ago and she wants no reminder of him. Above all, she wants her daughters, Lisa and Bethany, to be raised correctly: that is, protected from any strange influences. To portray Mary:

- Keep your knees together and your hands clasped tightly
- Speak with suppressed anxiety
- Look from Investigator to Investigator, as though one of them might change into a monster

Lisa and Bethany

Mary's daughters, Lisa and Bethany, are small children. They are quiet, innocent and secretly eldritch horrors. To portray Lisa or Bethany:

- Look directly at the Investigator speaking to you
- Play with an imaginary toy or, if there is one nearby, a knife
- Smile pleasantly when you talk about things you like, especially if they are horrific

Ada Walworth

Ada is the landlady of the Leeward Inn in Manesty. Since her husband's death, she owns it outright. The patrons, all locals, provide her with a modest living. With them, she is friendly; with outsiders, she is guarded. To portray Ada:

- Speak confidentially, as though about to impart a secret
- Lean on the table with one elbow
- Look guarded
- Occasionally serve another customer, with a much more friendly attitude

Eugene Gregson

Eugene is a farmer, living his final years in a farmhouse in Manesty. Although he is not as young as he used to be, he is agile enough to tend to his sheep. These makes him a small living, which he largely spends on beer. Although he

seems quiet, a few pints of beer makes him remarkably loquacious. To portray Eugene:

- Sigh occasionally
- Cradle your glass between your hands
- Look at a distant far-off point while you tell a story, looking back at the Investigators occasionally

Name Recognition

If you enjoy perplexing your players, try the following trick. It complicates the backstory slightly, but is worth the complexity.

Replace the name Wareing, throughout the scenario, with the surname of any Investigator. For example, if one of your Investigators is called Harold Whitelea, use the name "Whitelea" throughout the scenario, so that the family in Manesty is the "Whitelea family" and the NPCs are Jack, Mary and Victoria Whitelea.

This creates an eerie, mystifying moment, when one player realizes the family in Manesty has the same name as their Investigator. The Investigator who shares the family name was adopted, not by a stranger, but by a distant branch of the family in Manesty. For example, when Harold Whitelea was adopted, Jack and Victoria Whitelea sent him to distant relatives, also called Whitelea.

This is a wonderful device for bewildering the players. However, if *you* find it bewildering, ignore it.

Geoffrey

Geoffrey, the brother of one Investigator, is a mild-mannered, unmarried man. His plans for a quiet, routine life have been frustrated by heart problems. Specifically, it has stopped beating. But he feels fine, and hence he is terrified. He does not know why he is in Manesty.

To portray Geoffrey:

- Speak softly, looking directly at the person you are addressing
- Widen your eyes
- Frown occasionally

Jack

Jack is a monster, swimming under the Earth, who communicates with his family by radio. Having been under the soil for several years, he is losing his English vocabulary. He is delighted to be talking to his sons and excited they will shortly join him. To portray Jack:

- Look away from the Investigators: because you are on the radio, there will be no eye contact
- Sound excited and happy, especially when describing unpleasant things
- Occasionally, struggle to remember a specific word

The Blackstone Hotel, Keswick

Scene Type: Core

The small town of Keswick sits in the grim countryside of the Lake District. As the Investigators approach it, by different routes, they pass through hills that look more alien than natural. The rain is intense, making visibility poor and roads treacherous.

If Investigators arrived by car from London, they have driven all day, watching the landscape change from fields to factories and finally to forbidding hills. If they arrived by train, their journey has been similarly tiring, beginning at Euston Station in the morning, changing at Penrith and completing the last leg by bus.

That evening, they find themselves at the Blackstone Hotel, which overlooks Keswick's market square. This old, fading building retains little of its former charm. The red-and-gold wallpaper turned red-and-ochre a long time ago. The carpets are frayed, the furniture scuffed and a smell of mould permeates. Most disturbingly, the imitation gas lamps are turned so low the corners are dark, the shadows long.

The time is now half-past eight. Ask why each Investigator is in the hotel. Investigators with **Credit Rating** 3 or higher are probably staying for the night. Those with **Credit Rating** 1 or 2 might be stopping for a drink in the hotel bar, before repairing to a cheaper bed-and-breakfast establishment for the night. Investigators with **Credit Rating** 0 might beg at the kitchen doors for leftovers.

Also, ask where the Investigators are in the hotel. This gives the players a moment to establish their characters. Do they drink alone at the bar, eat quietly in the restaurant or engage the staff in conversation? Eventually, most drift to the hotel bar, where the scenario begins properly.

On the wall are sepia-toned photographs of local dignitaries. From across the room, one photograph catches an Investigator's attention. On closer examination, the reason becomes clear—it shows that Investigator as a child. Indeed, the Investigator has never seen a photograph of themselves at such a young age.

Probably they think this a coincidence. The coincidence rapidly gets stranger. One by one, other Investigators notice the photograph. Perhaps it catches their eye too; perhaps the first Investigator draws it to their attention.

All the Investigators are in the photograph. They are all children. Stranger still, their first names are listed correctly at the bottom of the photograph, although their surnames are given as "Wareing."

3

This photograph is the Hook for the scenario. The Investigation starts here.

Bringing the Investigators Together

To notice the photograph, the Investigators must all be in the bar together. This takes some work, but isn't hard. After all, it is an English hotel—everyone goes to the bar at some point.

If an Investigator is in the dining room, a waiter suggests they take coffee in the bar. If an Investigator is in their room, a disturbance brings them down to the bar to investigate.

Similarly, if an Investigator is begging at the kitchen doors, something tempts them inside—a scream or an unattended wallet. Or perhaps an Investigator screams when she sees herself in the photograph.

Better still, let the players bring their Investigators together. Simply tell them to find a reason to be in the bar. It's slicker than railroading them into the same location—and they always find a reason.

If this sounds too complicated, here is an alternative. Start the scenario with all the Investigators together, in the bar, after they have noticed the photograph.

Noticing the Photograph

Let's explain, slowly, how the Investigators notice themselves in the photograph.

First, tell one of the older Investigators the photograph catches their eye. Something is strange about it. They notice a child in the photograph, aged 4 or 5, that resembles them.

This child resembles pictures the Investigator remembers seeing, in their family home, of their childhood self. However, the child in this photograph is slightly younger. The Investigator has never seen a picture from this early in their life.

Stranger still, the child's first name, as inscribed below the photograph, is that of the Investigator. The family name, however, is different.

So far, so strange. Give that first Investigator a moment to react.

Now, repeat the process with another older Investigator. Perhaps they see the first Investigator looking at the photograph. They then notice a child, in the photograph, that resembles their own childhood self. Again, the first name matches.

Leave another pause for the two Investigators to react. Perhaps they talk. Perhaps they question the barman. Certainly, they should notice each other looking.

Next, use these two older Investigators to bring in a third. Perhaps they notice this third Investigator elsewhere in the bar. That Investigator strangely resembles *another* child in the photograph. Alternately, perhaps the third Investigator, noticing the first two, decides to see what they're looking at.

Use Geoffrey, too. When the Investigator related to Geoffrey notices themselves in the photograph, tell them Geoffrey is pictured too. Again, the name matches.

The youngest Investigators, being babies in the photograph, resemble their childhood selves less closely. Nevertheless, it is plausible they are the children in the photograph.

Thus, the Investigators gradually notice their childhood selves in the photograph. Immediately afterward, the Investigators need not be totally convinced they are related. They need only be curious enough to ask further questions.

Inns, Hotels and Pubs

In England, a **pub** is a place to meet and drink. It often contains more than one bar: a spartan public bar, with wooden tables, chairs and bar stools, which is traditionally the haunt of men; and a more convivial lounge bar, with comfortable chairs.

An **inn** is like a pub, but has rooms to rent. They are the traditional resting places of travelers.

A **hotel** is like an inn, but grander. Its purpose is to rent rooms, rather than serve drinks. Probably it has a bar, which is where one goes to drink.

Keswick

Scene Type: Investigative

The photograph suggests that the Investigators were born together, as part of the Wareing family, then adopted by the people they believed to be their biological parents.

However hard they try to disprove this, they cannot. For example, if any Investigator telephones their parents, they confirm the adoption. If an Investigator's Pillar of Sanity is connected with ancestry, this revelation might affect or even destroy it.

Stranger still, people in Keswick recognize the Investigators. They stop them in the street, addressing them as "Jack" or "Victoria." Of course, the people quickly realize their mistake, but the recognition remains disconcerting.

Of course, many Investigators, particularly those with strong family leanings, will deny their heritage. Let them. Do not force them to acknowledge they are Jack's children. Instead, let the realization creep up on them over the course of the scenario.

As the Investigators explore further, by talking to hotel staff or Keswick residents, the following clues are available.

1. Core Clue: The Wareing family come from Manesty, a small village close to Keswick.

- **Oral History:** Later that evening, you find Bob, one of the local residents, in a dark corner of the bar. In return for two large gin-and-tonics, he discourses freely about local history. After sitting patiently through tales of ghosts and mysterious disappearances, you drop the name of the family in the photograph. Yes, he says, Jack Wareing. He came from Manesty, but has not been seen for years.
- **Photography**: Against the protests of the barman, you remove the photograph from the frame. There are few clues in the photograph itself, but you find a photographer's mark on the back. It lists a location: "Manesty." Taking the photograph from you, the barman suggests you go there to investigate. It is, he says, a small village on the other side of Derwent Water.

From now on, strange things begin to happen to the Investigators. When they sleep, they have dreams; when they listen to a radio, they hear static.

Dreams

Scene Type: Antagonist Reaction

When the Investigators sleep, they dream. Give one of the following dreams to each Investigator. You need not use all the dreams, but ensure someone gets the first and second. More than one Investigator may get the second dream.

The other characters in the dreams are Geoffrey and the other Investigators. A dreamer who has met these people recognizes them instantly. Otherwise the dreamer recognizes them in a later meeting in real life. (All dreams are a Stability-3 check.)

- **The Sacrifice:** You are standing inside a stone circle. Others dance around you, with bizarre, ritualistic movements, whirling as they hold their arms horizontally. When you look down, you see Geoffrey, lying prostrate beside an open grave. In your hand is a curved, ancient knife of a strange metal. You know what must do. You slice Geoffrey's throat, shoulders and calves, with diagonal strokes. You wake up.
- **The Dance:** You are dancing within a stone circle. Your movements are strange; you hold your arms to the side, leaping and whirling. Yet you execute the steps without thinking, your body moving instinctively, as though you have known the dance all your life. In the middle of the circle is a figure holding a shining knife above a human sacrifice. As the figure brings the knife down, you wake up.
- **The Burial:** You are lying down. There is a familiar, comforting smell around you, although you cannot place it. Then you realize: The smell is soil. You feel enclosed, safe and warm. When you open your eyes, you see only soil—and when you open your mouth, soil rushes in. Yet you can still breathe. You are not scared. You sink deeper and deeper into the earth, feeling safer and safer.
- **The Shovel:** You are walking across a ridge in the hills, with a shovel in your hand. In the distance is a lake, glittering in the dark night. You are tired—you have walked so far! Nevertheless, there are duties to perform and you must continue. Ahead is a stone circle. You head toward it.

3

Don't just read these dreams to the players. Tell them how each dream starts, then ask them what they do. Don't worry if the dream ends differently because an Investigator does something unexpected. For example, in the first dream, the Investigator might drop the knife and run away. This is fine: just tell the Investigator that,

as they run away, they feel they should be cutting Geoffrey. And they know, instinctively, where the knife should go.

With that said, the dreams give the Investigator no real chance for action. They can react to events, but not truly participate. These dreams are portents, not investigative scenes. Keep them short.

If the Investigators try anything difficult, ask for an appropriate ability check. For example, if, in the third dream, an Investigator tries to escape from the grave, give them an **Athletics** roll. If they succeed, let them genuinely succeed. Perhaps the Investigator climbs from the grave, emerging within the stone circle. When the Investigator awakes, any points spent in the ability check remain lost. After all, the dream seemed real.

Within these dreams, not everything is clear. It is at your discretion, as Keeper, how much the Investigators see. For example, Investigators in the second dream might not be able to identify the human sacrifice, nor see the surrounding landscape. An Investigator in the third dream might know there are duties to perform, but not what they are.

After waking, the Investigators may choose to investigate their dreams. If so, encourage them to do so without leaving the Lake District. For example, encourage them to telephone a colleague in London, rather than travelling there. Emphasise Keswick has all the facilities they need for investigation, including an excellent library.

Investigating the dreams may reveal the following clues. Note that the second clue might be discovered simply by asking someone, rather than using an ability. After all, the stone circle is famous and something of a tourist attraction.

1. The knife is impossibly ancient.

- **Archaeology**: Casting your mind back to the dream, you picture the knife, trying to think rationally about its design. Yet the technical proficiency of its construction seems impossible, considering its apparent age. Moreover, the style of design resembles nothing you have seen. Certainly it is not of modern craftsmanship.
- **Credit Rating:** You telephone a friend at Sotheby's, the London auction house. Yes, he says, the

knife matches one he sold, years ago, to an anonymous bidder. It was clearly extremely old, but the style did not match that of any known civilization. He reads you the catalog entry from the auction. (See the handout "Entry in Sotheby's Catalogue" on page 117.)

2. The stone circle is Castlerigg Circle, nearby.

- **Flattery**: At breakfast, you ask one of the staff about the stone circle in your dream. Is there a stone circle near here, you ask, perhaps overlooking a lake? Yes, says the boy, that sounds like Castlerigg Stone Circle.
- **Occult**: When you wake, you try to keep the image of the stone circle in mind. At breakfast, you sit alone, trying to remember the local folktales. Eventually, you recall. The circle is Castlerigg Stone Circle, a local oddity.

3. The dancing ritual resembles historic rites of death and rebirth.

- **Anthropology**: After the dream, what remains with you is the dancing. It reminds you of an illustration you once saw—a drawing, in a dusty book, of someone doing the same dance. That morning, you investigate Keswick library. Although it does not have the same book, you find an identical illustration in a history of dance. Evidently the dance is Aboriginal in origin. It is a ritual of death and rebirth.
- **Art (Dance)**: What bothers you, on waking, is the dance. It reminds you of no dance you have performed or learned about. Yet something about it stays with you—a sense of numinosity, as though the dance was religious. Suddenly, you remember. You once read about the medieval dancing plagues of England, in which villagers would dance, uncontrollably, until they died. The dance was like the one in your dream. The church denounced it as a pagan ritual of death and rebirth.

Static

Scene Type: Antagonist Reaction

Whenever the Investigators find a wireless, it is emitting static. Tuning it does not help: on every band, there is static. However, others hear the wireless as normal. This becomes suddenly clear when an NPC begins singing, to music the Investigators cannot hear.

If they listen long enough, the Investigators begin to hear things in the static: first fragments of tunes, then traces of a human voice. Yet they are never sure what they hear. The sounds hover for a moment, then disappear, leaving the Investigators wondering whether it was their imagination.

2

Wirelesses might be found in almost any building, including:

- The hotel, playing in the background of the bar.
- Mary Wareing's house.
- The hospital in Keswick.

If the Investigators study the static:

1. No known science can explain the phenomenon.

- **Physics**: It is theoretically possible a transmitter, emitting white noise, could be drowning every other radio signal in the local area. But nothing explains the fact only some people can hear it.
- **Psychoanalysis:** Hearing voices and tunes in the static is easy to explain. It is the mind's unconscious desire for human contact, expressing itself by hearing things that are not there. The fact that others hear music is explicable, too, as a form of mass delusion. Yet this resembles no case you have previously encountered. Something is wrong.

Castlerigg Stone Circle

Scene Type: Floating

Having dreamed of a ritual in a stone circle, the Investigators may want to find the circle. This is easy; Castlerigg Stone Circle is well-known by locals. It is fifteen minutes' drive from Keswick itself.

When they arrive, they recognize the location of the dream.

3

The surrounding landscape is exactly as the Investigators dreamt it. If the Investigators walk about a mile southwest, roughly in the direction of Manesty, they find the ridge from the dream "The Shovel."

Apart from that, there is nothing here. If the Investigators dig in the soil, where they dreamed a body was buried, they find nothing.

There is, as yet, nothing to investigate. This scene is hardly a scene, but a moment of strangeness. If the Investigators come here, they should remain only briefly, then proceed to Manesty.

Manesty

Scene Type: Travel

Manesty lies on the other side of Derwent Water, a dark and glittering lake. To get there from Keswick, the Investigators must go around the Water. Perhaps they head south along the main road, then turn west up steep and winding lanes. Alternately, they may head west, along a high road that looks down on the Water, then descend a hill into Manesty. Finally, they might take the ferry, which crosses Derwent Water on its run from Keswick to Brandlehow Wood.

The village, constructed of the local grey slate, appears grim and forbidding. The blocky stone buildings look somehow out of place, hemmed in by the rough countryside around. At the corners of the buildings, the protruding slate forms sharp, jagged edges, as if the village was trying to defend itself.

Above Manesty tower two moors, Cat Bells and Maiden Moor. Both are bleak and deserted: the only signs of human life are abandoned lead mines. If the Investigators follow the hill down from Manesty, they arrive at the swampy south end of Derwent Water.

Within Manesty, three locations interest the Investigators: the Leeward Inn, Mary Wareing's house and the Old Schoolhouse. The same clues are available from any of these locations.

The Wareing House

Scene Type: Investigative

Mary Wareing lives in a small, grey cottage. It lies a short distance, up a dirt driveway, from the road that winds through Manesty. As the Investigators approach, they get a strong sense of familiarity. They have heard the birdsong before and the crunch of the gravel beneath their feet.

When they knock on the door, tell one Investigator that they instinctively know, before the door opens, what the wallpaper in the house is like. It is yellow, with a design of tulips. When Mary opens the door, their knowledge is confirmed, although the wallpaper is more faded than they thought.

This knowledge, of course, is a memory from childhood. The Investigators were raised in this house. As they move through the house, other memories come to them: the dusty smell within the house; the view of the garden; a sense that a room should contain a table (it was removed years ago).

Mary invites the Investigators into the living room and makes them tea. When she realizes who they are, she faints. On recovering, she appears scared and reluctant to talk. She directs the Investigators to the Old Schoolhouse, below, of which Jack was headmaster.

Keep Them Here

The Investigators may be tempted to leave the area. For example, they might drive out of the Lake District, to see whether wirelesses still play static. Alternately, they might want to consult the British Library in London.

The scenario will still work if they do this. However, try to dissuade them; if the Investigators keep rushing back to London, it spoils the sense of isolation. Where possible, encourage them to investigate within the Lake District.

You might also try the direct approach. Tell the players that, if their Investigators remain in the area, the scenario works better. For the right players, this is a useful and honest solution.

During the conversation, Mary's twin daughters, Lisa and Bethany, peer from behind the doorway. After a while, they grow bored and retire to another room to listen to the wireless. The wireless, of course, plays static.

If an Investigator observes the twins, they notice Lisa and Bethany sometimes talk to the static. If asked why, the twins look surprised. They always talk to the wireless, because it talks to them. It is their friend. It says hello and asks them how they are. If asked, they also admit to hearing static on the radio. It has always been there.

Talking with Mary or exploring the house makes available all the clues listed under "Clues in Manesty."

The Leeward Inn

Scene Type: Investigative

Manesty's only inn is advertised by a creaking, faded sign outside. Once inside, the Investigators find a cold, dark bar, where the villagers drink in the evenings. They are met with suspicion by the landlady, Ada.

Nevertheless, since this is an inn, the Investigators may stay here, for a few shillings, if they have any **Credit Rating** at all. Rooms are spartan and wooden, each with a puritanically narrow single bed and an ancient oil lamp.

At the bar, the Investigators find Geoffrey. Any Investigator related to him recognizes him instantly. Otherwise, another Investigator realizes he is the other child from the photograph.

He is scared. He felt compelled to come to Manesty but does not know why he is here. He is drinking heavily, but wonders whether this makes him susceptible to whatever is influencing his mind. Strangely, he keeps taking his own pulse (see Clue 1, page 85).

By talking to Geoffrey, Ada and other villagers in the bar, the Investigators may discover any of the clues listed under "Clues in Manesty," below.

The Old Schoolhouse

Scene Type: Investigative

The Investigators may not immediately notice the Old Schoolhouse. It is an unremarkable, disused building. On closer inspection, it is a tiny Victorian school, with separate entrances marked "Girls" and "Boys."

The building is not locked. Inside, everything has remained untouched since Jack left, six years ago. Thick dust covers rows of wooden desks. The blackboard, behind cobwebs, shows a quadratic equation. Weeds and moss push through the flagstones on the floor.

Again, the older Investigators feel a dreadful familiarity; they remember this room from early childhood. To them, the room feels much smaller than it should be. These older Investigators may find their old exercise books, stored in the school office. (See "A Child's Story in an Exercise Book" on page 119 in the Handouts section at the end of this book.)

3

One Investigator feels strongly a particular desk is their desk. Indeed, if they lift the desk's lid, they find

their first name scratched underneath, in a childish version of their own handwriting.

3

There is much to investigate within the school: exercise books, filled with children's stories; essays on local legends; and the school records. From any of these sources, the clues below are available.

Clues in Manesty

Scene Type: Investigative

These clues can be found anywhere in Manesty, particularly at the Leeward Inn, the Wareing House or the Old Schoolhouse.

1. Geoffrey is not, according to normal human biology, alive. (For the Stability test, use the higher loss if Geoffrey is a Source of Stability.)

3/5

- **Medicine**: You try to take Geoffrey's pulse. However, you cannot find it: neither in his wrist, nor anywhere else in his body. He feels clammy and complains of loose skin around his fingertips. There is no medical way that this man should be alive.
- **Reassurance**: You notice Geoffrey trying to take his own pulse. Taking his wrist gently from him, you try to find the pulse, but cannot. Geoffrey begins to cry. He does not feel alive. He thinks he is breathing less than normal. He fears he is dying.
- **Credit Rating**: Arriving at Keswick Hospital, you bundle Geoffrey toward the nearest doctor. What the bloody hell is wrong with him, you demand? The doctor examines him, then pauses, and examines him again. His heart isn't beating. What do you mean, you say, he's alive, isn't he? He seems to be, says the doctor. But his heart isn't beating.

2. Jack Wareing left six years ago, with no explanation. This was uncharacteristic of him.

- **Flattery**: You affect a charming smile as Mary pours you tea. But why did Jack leave, you ask? You cannot imagine that any man in his right mind would leave her willingly. She does not smile at this, as you had hoped. Instead, she frowns, explaining that she does not know. After having bad dreams, Jack simply disappeared. He did not pack before he left.
- **Bureaucracy**: After sorting the papers within the school office, you are little wiser. You had hoped for some explanation as to why Jack disappeared. Instead, there is nothing. One day, he simply left. The children must have arrived at school that day. One child has left a note saying "You are not here. We are going home. Come and get us when school starts." Evidently, school never started again.

3. Jack Wareing was frightened of his reflection in the mirror.

- **Evidence Collection:** While Mary tidies away the cups, you ask to use the lavatory, then take the opportunity to poke around the house. On the bathroom mirror, you find curious scratches. They are shaped like a head, as though someone had scratched around their own reflection. Judging from the height of the scratches, it was Jack, but the head is strikingly inhuman. There are horizontal lines running across it, making the face look wormlike, while the eyes resemble slits.
- **Assess Honesty:** You press Mary for other information about Jack, but she says she knows nothing. Yet she refuses to meet your eye, so you realise she is lying. What is she hiding, you demand? She relents. It sounds silly, she says, but Jack was frightened of a monster in the mirror. It was his own reflection.

4. There are folktales of wormlike monsters, lurking beneath the earth.

- **Oral History:** In the Leeward Inn, you realise that you will only get information from Ada by listening to her stories. First, you endure her autobiography. Then, more interestingly, she turns to local legends. People say, she intones, that wormlike monsters lurk below the earth. Sometimes, a farmer would find a grey, slithery hand in their fields. When touched, it withdrew into the soil.
- **Library Use:** Sitting in the school office, you sort through the exercise books. One of the children's essays catches your attention. It is a story, purportedly fictional, about a girl killed by wormlike creatures. Adjacent is a drawing of a humanoid monster, with ridged skin, climbing out of the ground.

5. A pig has gone missing.

- **Bargain**: Sitting by the fire in the Leeward Inn, you make pleasant conversation with Eugene, a local farmer. In exchange for a steady supply of beer, he gives you information, although little is of interest. One of his pigs has

Remembering Childhood

Most people cannot remember events before their fourth birthday. Hence, the youngest Investigators, who were less than two years old when they left Manesty, do not remember the village at all.

Investigators who were aged two or three on leaving Manesty may remember fragments. For example, the wallpaper in Mary's house may seem oddly familiar.

The oldest Investigators have more memories of Manesty. However, because their adoptions have previously been denied, they have no clear memory of early childhood. As the scenario progresses, they remember more and more.

disappeared, he says. He cannot explain it. Surely it can not have been stolen? A pig rustler would not come to Manesty.

- **Biology**: You wander around the local area, but all you find is a deserted sty. The pig is missing, but has not been gone for long; there is fresh dung, which cannot be more than 12 hours old. But this was a young pig—surely it cannot have been slaughtered? The farmer explains, darkly, the pig simply disappeared.

6. Before Manesty existed, there was another village, Low Manesty, which was destroyed.

- **Oral History**: With beer inside him, Eugene becomes loquacious. His tales are varied: he describes the Lake Windermere ghost and the legend of the black hands. This strikes you as harmless fiction. Then he tells you about Low Manesty, "the village that was here before." Only its ruins remain. He points in their direction; they are down the hill, toward Derwent Water.
- **Archaeology:** Manesty is relatively new, probably constructed in late Victorian times. Yet, from your room in the Leeward Inn, you see a peculiar line in the landscape, suggestive of a previous settlement. Next morning, you hike out to confirm your suspicion. Indeed, this appears to be a previous village, built in the eighteenth century, then destroyed approximately a century later.

7. There are rumours of sacrifices in Castlerigg Circle.

- **Occult**: The more you see the landscape, the more it reminds you of a book from years ago, on the witch-cults of the Northern Lake District. Castlerigg Stone Circle, not surprisingly, was a focal point for the witches. Peculiarly, there were rumours of human sacrifices. The victims were buried alive.
- **Anthropology**: Reading through the school exercise books, you are particularly struck by a child's story, which strikes you as a repetition of a local legend. It talks of rituals, performed at Castlerigg Circle. The end is particularly gruesome—a sacrificial victim was buried alive.

8. Core Clue: Jack used to go to the Maiden House on Maiden Moor.

- **Library Use**: Despite searching the school meticulously, you feel you are missing something. Then, on the edge of sleep, you remember. In an exercise book was a story about the Mad Man of Maiden Moor. Late at night, the man would creep to the Maiden House, on a desolate ridge of the moor. Perhaps this man was Jack?
- **Credit Rating:** That evening, in the Leeward Inn, you see Mary Wareing. She is avoiding your eye. Assuming your best imperious manner, you demand what is going on. She blushes. After you left, she says, she examined Jack's things. Amongst them was a map, with a location marked: a house on Maiden Moor.
- **Locksmith:** The attic of the Wareing House is locked, but a palette knife, applied at the right angle, opens the trapdoor. Inside, a small box contains what remains of Jack's things. Only one thing is remarkable: a map, with a location marked on Maiden Moor. It is labelled "The Maiden House."

Keswick Hospital

Scene Type: Floating

Keswick Hospital is a dark gothic monstrosity, constrasting oddly with the surrounding fields. As they arrive, via a gravel driveway, the Investigators enter the shadow of the building, then pass through a great arched door.

This hospital is the main medical centre for the Northern Lake District. The staff are friendly, competent and helpful. Additionally, there are all the facilities the Investigators might need, including a place for Geoffrey to stay and be cared for. One of the hospital's main assets is Dr Rochdale, a consultant who is experienced, sprightly and ancient (although not eldritch). Any Investigator with Medicine recognizes he knows his stuff.

Let's be straight here. The hospital is a device to ensure, when the Investigators need medical facilities, they don't rush back to London. Particularly, the hospital is here to ensure Geoffrey stays nearby. Given that his heart has stopped beating, it's likely the Investigators will want him to get medical attention. If so, Keswick Hospital is the place. It would be foolish, given his condition, to transport him further. Within the hospital there is a room where he will remain under medical observation.

Now, if the Investigators insist on getting Geoffrey away from the Lake District, don't stop them. It makes things less dramatic, but does not break the scenario. Nevertheless, if you can, keep him within travelling distance, ready for the ritual at the end of the scenario. With the right group, you might simply explain keeping Geoffrey nearby improves the story.

At the hospital, the Investigators might uncover some of the clues above, particularly the one involving Geoffrey. They might also discover the following.

1. There is an obscure case study, from 1816, of Betty Wareing, who had symptoms similar to Geoffrey's. She is, of course, an ancestor of Jack Wareing.

- **Medicine**: Explaining that you are a General Practitioner from London, you ask for a private word with Dr Rochdale. What on earth could be the matter with Geoffrey, you ask? Dr Rochdale expresses animated ignorance. When pressed, however, he recalls a similar case, which he came across while completing a research project. In the archives of the hospital, he finds a Victorian textbook, which details the case. Her name is Betty Wareing.
- **Flattery**: You simper and flutter your eyelashes a little. Surely, a man of Dr Rochdale's experience must understand this? Has he any idea at all? He is not immune to your persuasion. Although it is odd, he says, he remembers a case from Victorian times. He fetches a book from the hospital's basement. "Here it is," he says. "Betty Wareing."

Low Manesty

Scene Type: Investigative

Below Manesty, fields and woods slope down toward the swampy Southern end of Derwent Water. As Investigators explore, they walk through a gate and down a wooded path.

Just off the path are the ruins of Low Manesty. Nothing remains but foot-high stumps of walls. On examination, the ruined buildings resemble those of Manesty proper; there are cottages, a church and the obligatory pub. Looking closer, the Investigators find fragments of human bone and an occasional skull. None are intact.

Further toward the lake are traces of an earlier village, which locals have christened "Lower Manesty." Lower Manesty dates from even earlier, having been destroyed at the turn of the 18th century. Today, only tiny pieces of brick and bone remain, suspended in the swamp.

In Low and Lower Manesty, the following clues are available:

1. Low Manesty was destroyed in 1816.

- **Archaeology**: You judge that Low Manesty was built in the early eighteenth century, but destroyed in early Victorian times. Wanting a more exact date, you check Keswick Library. A volume of local history mentions unexplained deaths around 1816. This, you assume, is when Low Manesty was destroyed.
- **Oral History**: You press Eugene for more information. From his circuitous stories, one useful snippet emerges—a story heard from his grandfather, which he, in turn, heard from his grandfather. After Low Manesty was destroyed, there was no harvest. Eugene attributes this to mystical causes, but you suspect a more prosaic explanation: Low Manesty was destroyed in the notoriously cold summer of 1816.

2. Lower Manesty was destroyed in 1697.

- **Library Use**: Wondering when Lower Manesty was destroyed, you consult parish records. Many parishioners, you note, disappeared around the turn of the 18th Century, particularly in 1697. Perhaps this was when the village was razed.
- **Occult**: Despite a long day in Keswick Library, you find little reference to Lower Manesty. Oddly, however, the local heretic sects appear particularly active around the turn of the 18th century. A sermon dated 1697, captured in a later Victorian history of blasphemous tracts, mentions the destruction of a local village by the Devil. Perhaps this refers to Lower Manesty.

3. The buildings were torn apart.

- **Architecture**: You're familiar with the ways structures can fail, but this is peculiar—these buildings were scattered. Perhaps there was an earthquake, but why are so many bricks split in half? You

Welcome to the Sandbox

As you may have realised, Manesty is something of a sandbox—an area suited for unstructured, open-ended exploration. Once the Investigators arrive, there is much to do and many places to go.

So pace the scenario carefully. Once you reveal the clue about the Maiden House, the Investigators will leave Manesty and, probably, not come back. Save this clue until they have explored the village. The Investigators need not go everywhere; they may miss Low Manesty or the Old Schoolhouse. But make sure they explore thoroughly before you mention the Maiden House.

Apart from the clues above, there is much for the Investigators to discover within Manesty. Specifically:

- The static on the radio
- The dreams
- Geoffrey
- The twins dancing

You needn't use all of this. However, before the end, you *must* mention the radio static and the dream about dance steps. So start early. If possible, describe the static and the dreams when the Investigators are in Keswick.

If you have time, escalate some of the elements, making them creepier:

- A voice in the static that seems to be trying to talk to the Investigators, although they cannot quite hear it.
- More dreams of sacrifices and swimming beneath the earth.
- Geoffrey becoming icy cold and short of breath.

Here is a checklist of the things you should describe:

- The static. Do this twice, if you can, with two different wirelesses.
- The dream about the dance steps.
- The dream about the sacrificial knife.
- Geoffrey having no pulse.

Postpone the Core Clue about Maiden Moor as long as possible. Everything else is just a toy for you to play with. Put in what fits. Don't worry if something gets missed.

suspect something deliberately tore these cottages apart. Indeed, if you did not know it was impossible, you could swear those are teeth marks on the bricks.

- **Library Use:** Much ecclesiastical correspondence describes "blasphemous devils" tearing apart Low Manesty. (See "Letter to the Bishop of Carlisle" on page 120 in the Handouts section at the end of this book.) At first, you think this fanciful. Yet, looking closely at the bricks, you see markings that resemble teeth marks.

4. There are records of wormlike monsters rising from the soil.

- **Art**: A pattern of scratches, at the bottom of a wall, catches your eye. It is a sketch, split across several bricks. It depicts a humanoid figure, with wormlike arms and legs, climbing from the soil. This must be one of the creatures that destroyed Low Manesty.
- **Credit Rating:** Exasperated, you order Eugene down to Low Manesty. A half-crown buys his help. Scurrying over to a crumbled wall, he points out a carving. It shows a wormlike, humanoid monster, climbing from the soil. These, he says, are the things that tore the village apart.

The Dance in the Blood

Scene Type: Floating

Use this scene to shake up the Investigators. When their investigation is progressing smoothly, throw this at them.

Late at night, music wakes the Investigators. It is a strange, drifting tune, like the notes in the radio static. It penetrates unnaturally into their minds. It will not let them sleep. It seems to be calling them.

The Investigators trace the noise to the Old Schoolhouse. As they approach, the tune grows more insistent, the rhythm pounding and the pitch writhing. It is like the heartbeat of a dying man, yet seems strangely alien.

From the school gate, the Investigators see Lisa and Bethany dancing in the schoolyard. It is the dance the Investigators dreamed about. With intense focus and skill, they hold

their arms outstretched, leaping and whirling in bizarre patterns. They dance around a dark shape on the ground.

4

It is Eugene's missing pig. The girls have cut it, at the throat, shoulders and calves, using a bread knife. Now they dance in its blood, which spreads in a large, dark circle. In the darkness, the twins' legs and nightdresses appear black. On closer inspection, the blackness is congealed blood.

Beside the twins is a wireless, which the girls have carried from the Wareing house. It plays static. In the static, the Investigators hear the drifting, alien music that woke them.

Do the Investigators stop the twins dancing? If so, they snap instantly out of their trance, then begin to cry. Why, they ask, is the pig dead? The dance was meant to wake it up! Why did it not sink into the ground, like in their dreams?

If the Investigators return the twins to Mary, she turns ashen and hurries the twins aside. The following clues are available, either from Mary or the girls.

1. The girls have the same dreams as the Investigators.

- **Reassurance**: You sit down, on the schoolyard's gravel surface, next to the girls. The warm blood seeps into your suit trousers. Don't worry, you say. You hear things on the wireless too. Do the girls have funny dreams? Yes, they say. Dreams about dancing and being buried alive. And you are in them.
- **Intimidation**: As Mary takes the twins inside, you put your foot in the door. What the hell is going on here, you demand? Your children are covered in blood! Looking scared, Mary backs into the living room. They have strange dreams, she says, about being buried alive. They say they learned to dance in their dreams.

2. The girls have done this before.

- **Bargain**: All right, you say to the girls. If you tell me what is going on, I won't tell your mother. They look at each other. The dance never works, they say. The thing never comes back to life. They tried it before on a dog, but that didn't sink into the ground either. Why are the dreams wrong, they ask? In the dream, when you dance around someone, they come back to life.
- **Medicine**: Assuming your best bedside manner, you tell Mary she should not worry. Nevertheless, you insist, you must know what is going on. She relents. Two years ago, she says, the girl killed their dog, a family pet, then danced around it. They seemed disappointed when it did not come back to life.

If necessary, change the time or location; the Investigators might hear the strange music at any time. Similarly, the scene might occur anywhere; rather than dancing in the schoolyard, the girls might dance somewhere else. Perhaps, for example, the Investigators hear the music when they explore Mary's house, then see the girls dancing outside.

The Maiden House

Scene Type: Investigative

On the other side of Maiden Moor, hidden from Manesty, is an abandoned wooden house. It perches on a ridge, with the wind echoing around, chilling visitors to the bone. There is no road to the Maiden House, nor a footpath, and the Investigators must trek across open moorland to find it.

The windows are shuttered, but the door is unlocked. Inside is a smell of dust, wood and something more sinister—a faint odour, alien and barely definable, resembling bile and soil. The floorboards creak, deafeningly loud in the stillness. If the Investigators want to remain silent, give them a **Stealth** roll, Difficulty Number 6. There is no one to hear, but let them roll.

This is where Jack spent his final days, after disappearing from Manesty and before the ritual sent him into the ground. His papers and books are scattered over the ground floor—a mad collection of sketches, scribbling and quasi-scientific diagrams. A portable gas cooker sits idle. A mirror hangs on the wall. It seems the house froze in time when Jack left.

There is a wireless set, switched on. At the moment, it is silent.

On the upper floor are two rooms. To the left is a boxroom, containing crates: kitchen utensils, scrap paper, clothes. To the right is a bedroom. On the window sill is the sacrificial knife from the Investigators' dreams. See the second Core Clue, below.

While the Investigators are exploring, the wireless begins to emit static (even if the Investigators have switched it off or removed the batteries). As before, the airy, alien tune haunts the static, reaching into the Investigator's minds. Behind the music, a voice seems to bubble away.

Let the Investigators explore a while longer. If they try to silence the wireless, by breaking it, removing the power source or switching it off, the static stops. But not for long.

A voice comes from the wireless, calling the Investigators' names. It is Jack. His voice sounds distorted and guttural, although friendly. Sounding delighted, he welcomes the Investigators to his house. He is under the soil, he says, and looks forward to the Investigators joining him. He asks them if they feel the call. Clearly he expects the Investigators to reply; if they do, they can hold a conversation with Jack.

7

In the Maiden House, the Investigators may find the following clues. They are available either through reading Jack's papers or by talking to him.

1. The Great Cycle.

- **Intimidation**: Unable to keep the anger out of your voice, you yell at Jack. What the hell does all this mean? It is the Great Cycle, he says. Nobody can stop it. Every century, his brethren beneath the soil rise and reclaim the land. They tear apart the humans and their bricks and their children. Soon, they will rise again and tear apart Manesty, and you will rise with them, as one of them.
- **Occult**: On Jack's desk, there are books whose names you have heard, but which you have never actually seen. One volume of folklore, whose cover is missing, describes a Great Cycle, lasting just over a century. Every time the Cycle comes round, the monsters rise, then tear apart the human towns. They destroyed Low Manesty and the town before it. Soon, they will rise again and destroy Manesty itself.

2. The thing beneath the Earth.

- **Oral History:** Although repelled by Jack, you encourage him to talk. But you have difficulty following his train of thought; perhaps he is crazy, perhaps merely unused to speaking English. He implies there is something greater than the monsters: a mother, a progenitor or source. It has lain under the earth since ancient times, he says. You cannot understand the words that follow.
- **Art**: Jack has drawn many monsters, which are perhaps himself, or what he believes himself to be. You notice a darkness at the bottom of each one. Before, you had thought it was mere shading, but you wonder now whether it is significant. It appears to be a larger creature, which spawns the wormlike monsters.

3. The transmitter.

- **Physics**: One of the sketches in Jack's papers is clearly a circuit diagram. It is extraordinary. Although it is clearly a transmitter, the design is unlike any you have seen. There are shapes in the wiring you do not understand. Yet, on closer examination, the wiring is not actually wiring. This is not electrical. It is based on some other principle—perhaps air pressure, running through tiny tunnels in rock? Although it sounds implausible, you believe it might work.
- **Reassurance**: Steadying your voice, you ask Jack how he is speaking to you. His excitement grows. Look at the diagram on the desk, he says. It is a transmitter, drilled through the rock, deep underground.

4. Core Clue: All the Investigators are monsters.

Note: If the Investigators have spoken to Jack, you should not force them to make *another* Stability test here. You really shouldn't.

7

- **Library Use:** You sort meticulously through Jack's papers. You find a family tree, containing your name; folklore about the monsters beneath the soil; strange drawings of wormlike creatures that look human. Piecing it together, the implication is clear, although impossible. Jack was a monster and so are you. (Show the players the family tree handout on page 118 at the end of this book.)
- **Reassurance**: Speaking calmly into the wireless, you ask Jack to speak slowly. What does he mean, you ask? How can you join him? Containing his excitement, he tells

Next In Line

Now, one of the Investigators begins to suffer the same symptoms as Geoffrey. Choose either the oldest Investigator or anyone who still denies being a monster. That Investigator's heart stops. Their skin feels loose, especially around the fingers. Perhaps, even, their skin splits at the fingertips, revealing a wormlike hand beneath. If the Investigators attempt to tear off the skin, the split enlarges, revealing more of the wormlike hand. They cannot tear all the skin off.

Most disturbingly, when they look in a mirror, they begin to see a monster. If they look more than once, they see themselves becoming more monstrous.

you he is swimming beneath the earth. He is a monster, and you are a monster.

5. Core Clue: Tonight, Geoffrey will reveal his true form, as one of the wormlike creatures. If the Investigators cut him with the sacrificial knife and perform the ritual from their dreams, they will send him into the soil.

- **Library Use**: In Jack's papers, you find a reference to the strange knife. It is impossibly ancient, part of an ancient ritual of death and rebirth. It must be the ritual in your dreams. Jack's papers are clear:. He expects you to cut Geoffrey with the knife, then use the ritual to release him into the soil.

These are the final clues, but this is not the end of the scenario. Now that the Investigators know the full truth, they must choose whether to perform the ritual.

The Ritual

Scene Type: Core

The night after visiting the Maiden House, the Investigators wake in the dead of night. They know, instinctively, they must proceed to Castlerigg Circle. It is time for the ritual.

Geoffrey also wakes. If an Investigator is with him, he explains it is time to go. Unless restrained, he walks directly from wherever he is to Castlerigg Circle.Heedless of rain and mud, he crosses the dark moorland. Finally, he lies down in the Circle's centre, waiting to be sacrificed.

If Geoffrey is restrained, he struggles; make a **Scuffling** roll, using Geoffrey's statistics above. During the struggle, pieces of flesh tear off, exposing the wormlike creature beneath. If the Investigators successfully restrain Geoffrey, he begins to turn entirely monstrous. Because he cannot survive without the ritual, he begins to die. If kept restrained, he dies completely, and the scenario ends with the Investigators restraining a dying monster.

5/8

Use the second value if Geoffrey is a Source of Stability.

If Geoffrey is locked up, the Investigators receive reports he is struggling to get out. He begs to be freed. If nobody lets him out, the scenario ends with Geoffrey transforming into a dying monster. Throughout, he yells through the door, his voice becoming guttural and alien.

4/6

This is Not a Railroad

Do not railroad the Investigators in the final scene. Simply place the choice in front of the players and leave them to decide. Do they sacrifice Geoffrey, sending him into the Earth as a monster, or leave him to die?

In particular, although the Investigators feel compelled to do things, they can resist the compulsion. They feel compelled to go to Castlerigg Circle and complete the ritual, but they need not. They feel compelled to fetch the knife, but need not. They feel compelled to cut Geoffrey and dance around him, but they need not.

This final scene can end in many ways. The Investigators need never go to Castlerigg Circle; it's good if they do, because it's a dramatic location to end the scenario, but they need not. Perhaps the final scene ends in a hospital room, with the Investigators restraining Geoffrey as he turns into a monster.

Perhaps, alternately, the scene does end in Castlerigg Circle, but the ritual is never completed, because one Investigator shoots another. In the end, the Investigators choose what they do, which is the greatest horror of all.

Note that, even if the Investigators are located far from Castlerigg Circle, they feel compelled to go there. Geoffrey, similarly, wakes wherever he is and begins walking. Even if it takes him days, he walks directly to Castlerigg Circle.

Before arriving at the Circle, one Investigator feels compelled to get a shovel, while another feels they must get the sacrificial knife. Ideally, these two Investigators are the ones who dreamed "The Shovel" and "The Sacrifice," respectively, but it doesn't really matter. Wherever the Investigators are and wherever the knife is, one Investigator feels compelled to fetch it.

Once at the Circle, the Investigators know what they must do. One must dig a grave, which Geoffrey lies beside. Another then cuts Geoffrey's throat, shoulders and calves with the knife; without these lacerations, he cannot survive underground. Meanwhile, the other Investigators dance around, performing the steps they learned in the dream.

5/8

Once Geoffrey is cut, the Investigator with the knife places him in the grave. That Investigator pushes soil over Geoffrey, who sinks slowly into the earth. All the while, the other Investigators dance.

The Investigators feel what happens next: Geoffrey swims through the earth to join the other monsters below. (Describe this in a happy, upbeat way, as though describing a reunion. The players will hate you for it.)

And then it is over. The Investigators are left on a rainy, windy hill, in the middle of nowhere, knowing one day they will follow Geoffrey. If the ritual is not completed, Geoffrey begins to transform into a monster, shedding his skin. As he changes, he pleads with the Investigators to cut him. If they do not, he slowly dies before their eyes.

5/8

Indeed, throughout this scene, Geoffrey encourages the ritual. He pleads to be sacrificed; he smiles as he is cut; he asks to be lowered into the ground. When you play Geoffrey, look into the players' eyes and smile.

Enjoy this final scene. Don't be surprised if the ritual is never completed. Often, it ends in gunfire.

Epilogue

The Investigators leave the Lake District, knowing they are monsters. What do they do? Ask each player, each turn, how their Investigator's story ends. When it is their time to go, do they go willingly? When it is another Investigator's time to go, do they take part in the ritual?

Unless they die, the Investigators will descend into the soil, swimming under the Earth with their true family. In time, Lisa and Bethany will join them. One day, they will rise from the Earth and destroy Manesty. Mary Wareing will die. Ada will die. The Leeward Inn, the Old Schoolhouse and the Wareing House will be torn apart, brick by brick. And, 119 years later, the town that comes after Manesty will also be torn apart.

They will swim through the soil, worshipping the creature that created them, and one day they will rise and claim the Earth for her.

THE RENDING BOX

Introduction

In an antiques shop in North London, there is a box. Inside the box is an ancient creature, seeping through into the world. It shows the Investigators the universe as it really is.

The Rending Box is the final Purist adventure for *Trail of Cthulhu*. The previous scenarios, *The Dying of St Margaret's*, *The Watchers in the Sky* and *The Dance in the Blood* have hinted about an immense, fecund creature, spawning beneath the soil of the Lake District.

In *The Rending Box*, the Investigators see that creature. Indeed, they may discover everything: the patterns behind the universe, the monsters older than time, the secrets that break your mind. And all they need to do is open a box.

If you are playing this scenario as part of *The Final Revelation* framing sequence, this episode is triggered in the section "Meeting 4: Facing Death," when the Investigators enter the cellar of Jacobs Books and read the book clutched in the corpse's hand, *The Rending Box*.

How the Universe Is

The thing in the box lets the Investigators see everything clearly, for the first time. This, then, is how the universe really is.

People are primordial, jelly-like blobs. Surfaces are spongy and wet. Geometry is multi-dimensional, too complex for the human mind to comprehend; objects look bigger from different angles.

Underlying all this is a pattern. When you see the world truly, things align and make sense. Stars flow in one direction; trees grow in a significant way; people move in complex, mind-breaking patterns. Within this pattern, mathematics, magic and geometry are all one. When you see it, you see the movement of life and time.

If we knew this, we would go mad. Hence, the parts of the brain that perceive these things go unused in normal humans. Instead, we see comforting illusions. People seem smooth and humanoid, surfaces feel firm and we only see three dimensions.

All of this is represented, in *Trail of Cthulhu*, by the abilities **Sanity** and **Cthulhu Mythos**.

Sanity represents your ability to perceive the illusory world. When it is high, you see humanoid people, smooth surfaces and no patterns. As it drops lower, you start using parts of the brain people do not normally use. People become jelly-like, surfaces spongy. When it reaches zero, you see everything.

Cthulhu Mythos represents your ability to follow the patterns underlying the Universe and make deductions. For example, given an image of Cthulhu, you can follow the pattern to the Pacific Ocean and into dreamspace. You distantly perceive the thing sleeping beneath the sea. You may even discern its name, Cthulhu. These deductions can break your mind.

This explains why reading the *Pnakotic Manuscripts* or seeing Gol-Goroth helps you deduce facts about other Mythos entities. You didn't gain knowledge from what you saw. You gained *insight* into the universe.

This insight is granted by Daoloth. He is the Render of the Veils, the banisher of illusion. He shows the underlying patterns and the mind-breaking reality. He enables this insight, gives it and tempts people toward it. He both grants the Cthulhu Mythos ability and *is* the ability. And the Investigators are about to find him in a box.

The Hook

The Investigators receive a postcard from an old friend, asking them to bring an antique box to a hotel in the Lake District. For the postcard, see the handout at the end of this book.

The Horrible Truth

For years, Jakob Tulving, a Cambridge University professor, has researched the folklore of the English Lake District. Behind the legends of strange creatures, he has spotted patterns, indicating something larger, that created all of the Lake District's monsters.

Investigating further, he moved to the Thorndike Hotel, on the remote coast of the Western Lakes, taking his books with him. As he read his

literature and listened to folk tales, he realized a missing piece of the puzzle: an old wooden box. He telegraphed to London and, uncannily, discovered it in an antiques shop in Golders Green. He sent a cheque immediately.

At this point, Tulving remembered some contacts who might help him. These are the Investigators. Perhaps, he thought, they might bring the box to him. Indeed, they might be interested in his studies. So he wrote to them.

Then he continued his work. He began to see the patterns behind the universe. The hotel residents appeared less humanoid, its surfaces less solid. He grew convinced that, without his eyes, he would see better, and he removed them carefully with a hot knife.

Now he sits in the Thorndike Hotel, excited by his insight, but protective of the last threads of his sanity. He does not want to learn more.

If he did, he would discover that he was right. There is, indeed, a larger creature that spawned the monsters of the Lake District. It is **Shub-Niggurath**, the Black Goat of the Woods. She grows through the centre of the Earth, reaching out tendrils to the surface. One tendril reaches to the West Coast of the United States, another to the English Severn Valley, another to the Amazon.

And, of course, a tendril reaches to the Lake District. Tulving, having deduced this, suspects that nearby Horsefalls Wood is the tendril.

In fact, it is rather bigger. The entire Lake District is a tendril of Shub-Niggurath. Over many years, this tendril has accumulated soil and rock. Sometimes, when Shub-Niggurath is disturbed in her half-slumber, she writhes and turns at the centre of the Earth. As she does, the Lake District changes subtly. Hills move, rivers divert and fields become oddly angled.

So Tulving is right. He is right, too, that the box will grant him insight. For it contains an image of Daoloth, the Render of the Veils, a god who shows the world as it truly is. Perhaps, even, it is something more than an image—an aspect of Daoloth, an avatar; a crack through which Daoloth seeps, a hole through which he peers.

The Spine

After receiving Tulving's postcard, the Investigators find the box in an antiques shop in Golders Green.

When they arrive at Thorndike Hotel, it appears deserted. On closer inspection, they find Tulving in his room. He has cut his eyes out with a heated knife, believing it would help him see better. Strangely, Mrs Baddeley, the hotel owner, has disappeared.

Meanwhile, any Investigators who have looked in the box begin to perceive the true universe. To them, other people become amorphous humanoids. Eyes watch from corners of rooms.

Following Tulving's investigations, the Investigators come to Horsefalls Wood. There, they meet the woodlands folk, who abducted Mrs Baddeley and sacrificed her to the creature beneath the forest floor.

At the heart of the forest, the Investigators descend into the creature itself. Inside, they find Mrs Baddeley, half-digested and beyond help. The creature, they find, expects one Investigator as a sacrifice. Finally, they may realize that, given enough gasoline and explosives, the tunnels they are in will burn.

At the end, the remaining Investigators stand on a hill in the Lake District. There, they see the entire landscape turn, like a creature turning in its sleep. The creature is larger than they could have imagined.

Sample Investigators

You can either use the sample Investigators provided or make your own.

If you make your own Investigators, note that **Library Use** and the Interpersonal abilities are particularly useful within this scenario. Also, in the interests of allowing the Investigators to go mad quickly, try disallowing the **Psychoanalysis** ability.

Finally, find a way of connecting the Investigators into the scenario, by building connections between them and to Jakob Tulving.

For example, the sample Investigators might connect as follows: Rev Bowles, a friend of Jakob Tulving, and Theo Warren, a fellow patient, receive postcards. They meet with Dr Muir, whom they know is Tulving's former doctor. At Rabinowitz's shop, they meet Sister Bertha, who is shopping there and has the Bad Luck drive, and Ella McDonagh, who demands to know what is happening.

[= Occupational ability]*

Dr Dolores Muir

Concept: Unflappable doctor to the insane
Drive: Scholarship
Occupation: Alienist
Sex: Female

Sources of Stability: Dr Agnes Waite, the other female doctor at the asylum; Patience, my daughter; Mr Manfred, a librarian at the British Museum Library.

Pillars of Sanity: The human mind is susceptible to scientific enquiry. I am older than you and know better. I am perfectly sane.

Investigative skills: Anthropology 1, Art History 1, Biology 2, History 1, Languages 2, Law 1, Library Use 2, Medicine 4, Bargain 1, Bureaucracy 1, Intimidation 2, Reassurance 2, Accounting 1, Outdoorsman 1, Pharmacy 2.

General skills: Athletics 2, Driving 5, Fleeing 5, Health 10, Sense Trouble 10, Preparedness 10, Stability 10, Electrical Repair 5, Riding 5, Sanity 10.

As the Deputy Director of Caterham Asylum, you have seen every madness under the sun. Nothing surprises you any more. Within minutes of meeting a patient, you have categorized them and know what treatment is best.

Take, for example, Jakob Tulving. Every five years, he relapses into mania and delusion, rambling about occult sects, ancient folklore and God knows what else. His writing, normally composed and exact, sprawls over the page. You know his mind better than your own.

As you grow older, your memory worsens. Often, you forget where you have put books. You misspell words you would never have misspelled in your youth. Sometimes, in speech, you grasp for words; the other day, for example, you could not remember which meat came from a pig. You realize your faculties are declining. In your wilder moments, you fear you are losing your mind. Having always prided yourself on your sanity, this shakes you. Surely you are different from your mentally feeble patients? What would you do if your mind began to go?

Your eyesight, too, is deteriorating. You cannot read without glasses nor recognize people until they are close. You are getting older. This scares you.

These fears emerge in your manner; you are abrupt, dismissive and judgmental. You tell yourself you do not suffer fools gladly, yet wonder whether you are becoming a fool yourself.

Rev John Bowles

Concept: Bookish theologian
Drive: Antiquarianism
Occupation: Clergy
Sex: Male

Sources of Stability: Brother Vincent, a monk; Father Newell, a priest and colleague; Timothy Marr, a drinking companion.

Pillars of Sanity: Knowledge leads to God. God has a plan for us. Nature is a gift from God.

Investigative skills: Archaeology 1, Architecture 1, Art History 1, History 2, Languages 2, Library Use 2, Occult Studies 1, Theology 2, Assess Honesty 2, Bureaucracy 1, Oral History 2, Reassurance 2, Evidence Collection 1, Outdoorsman 1.

General skills: Driving 5, Fleeing 10, Health 10, Sense Trouble 5, Preparedness 5, Stability 10, Explosives 5, Firearms 5, First Aid 6, Mechanical Repair 5, Sanity 10.

For you, God lies at the heart of a library. Having passed years reading in quiet rooms, you appear surprised when others speak to you. If you could design heaven, you would fill it with books and enforce silence on other souls.

Hence, when offered the position at Lambeth Palace, you accepted immediately. That was twenty years ago, and since, you have torn through the Palace Library, looking for God in books. You long to find proof of His existence, but an indication, a pointer, would satisfy you.

Like many theologians, you have more correspondents than friends. Some study religion, some do not, but all research fields related to your own. One such is Jakob Tulving, a folklorist. You have, from time to time, spent pleasant weeks at each other's houses, engaged in intricate conversations over rough red wine. His studies have recently tended toward occultism, which, although naive, livens up the conversations pleasantly.

You look forward to hearing from him again. Above all, however, you want to know what he is studying. Jakob, you felt, was always on the edge of something significant. Perhaps he has now found it. Perhaps, through him, you can find God.

Sister Bertha

Concept: Amiable nun
Drive: Bad Luck
Occupation: Clergy
Sex: Female

Sources of Stability: Agatha, Mother Superior; Rose, my sister; Julia, a nun and a close friend.

Pillars of Sanity: It all turns out right in the end. Worse things happen at sea. A bit of dirt never hurt anyone.

Investigative skills: Art History 1, Biology 1, History 2, Languages 2, Library Use 2, Occult Studies 1, Theology 2, Assess Honesty 2, Bargain 1, Credit Rating 4, Flattery 2, Oral History 1, Reassurance 2, Streetwise 1, Evidence Collection 1.

General skills: Athletics 10, Driving 5, Health 10, Scuffling 10, Stability 10, Electrical Repair 5, Firearms 3, First Aid 3, Riding 5, Sanity 10.

Funny things are always happening to you. The other day, you were in Lambeth Palace Library, talking to the librarian, who to be fair didn't seem all that interested, but you didn't let that stop being friendly, oh no, a friendly word never hurt anyone. Where were you?

Oh yes. You were in Lambeth Palace Library, talking to the librarian and then someone asked you to be quiet! Some people don't like friendly people. Oh well. You keep on smiling.

Now, to be fair, this friendliness does sometimes get you into trouble. You are always in the wrong place at the wrong time! Just the other day you left a book in the vestry and, when you returned to get it, two Sisters were kissing! Naturally, you didn't tell anyone—other than a few close friends.

And you meet the most interesting people. Just the other day, in the library again, you met a nice priest called Bowles. What a coincidence, you told him. You play bowls! He did not understand how funny this was and sent you to find books.

Amazingly, one of the books was stolen! From an antique bookseller in Oxford! You recognized the stamp as soon as you opened it! So the Library had to return it and they were not happy. Things like that are always happening to you.

However, nothing funny is going to happen today, because you are only going shopping. In fact, you are off to Golders Green, to poke around antiques shops. And nothing interesting will happen *there*.

(Note: If you use Sister Bertha, she must aggressively push herself into the investigation. Choose a player who will do this.)

Theo Warren

Concept: Synesthetic composer
Drive: In the Blood
Occupation: Artist
Sex: Male

Sources of Stability: Jane Dartmouth, a sculptor; Martha Warren, my mother; Louis Armstrong, my idol.

Pillars of Sanity: If I see it, I can make it into a tune. Touch is the only sense I can trust. My reality is the one that counts.

Investigative skills: Architecture 2, Art History 2, Library Use 2, Occult Studies 2, Assess Honesty 2, Bargain 1, Credit Rating 1, Flattery 2, Oral History 2, Streetwise 1, Art 2, Astronomy 1, Craft 2, Outdoorsman 1, Photography 2.

General skills: Athletics 10, Driving 5, Health 10, Sense Trouble 8, Preparedness 8, Scuffling 10, Stability 10, Sanity 10.

Your senses bleed into each other. What you see, you taste. What you smell, you hear. The only way to trust things is to place your hand *sometimes you wake in the middle of the night and don't remember how you got there* on them.

So you write the music you see. You seek bizarre paintings and *sometimes you cannot remember the dream but it pulses in your head* landscapes, then write them into music. Although the London classical music set reject you, you have found refuge in the jazz scene. Their strange, living rhythms are red, purple and beautiful.

Sometimes you wake on a train and *you cannot control your thoughts you cannot control your thoughts* do not remember boarding, although you have a valid ticket. Sometimes you wake and you are standing *you cannot trust your senses* in a field, drenched in the falling *you cannot believe what you see* rain.

Everywhere you go, you carry sheet music, and often *there is a truth* scribble madly to capture a tune *there is a truth beneath it all* that flitted through your head. Often you find you are mumbling *what aren't you seeing* and people look at you in libraries *what is hiding* as though you are mad *what are you not seeing*.

Sometimes you lose control of your train of *there is a truth that you are missing there is a music behind the light where are you where are you this time*—

Ella Mcdonagh

Concept: Ambitious, stubborn young police officer
Drive: Adventure
Occupation: Police Detective
Sex: Female

Sources of Stability: Dorothy Peto, Commander, A4 Branch; George McDonagh, my father; Mrs Parker, my housekeeper.

Pillars of Sanity: The law. Britain. I can handle this.

Investigative skills: History 1, Languages 1, Law 2, Medicine 1, Assess Honesty 2, Cop Talk 2, Intimidation 1, Reassurance 1, Ballistics 1, Evidence Collection 2, Locksmith 1, Outdoorsman 1, Photography 1.

General skills: Athletics 10, Driving 10, Health 10, Sense Trouble 5, Preparedness 10, Scuffling 6, Stability 10, Firearms 10, First Aid 10, Sanity 10.

You love your job. When the police started taking women police officers, you knew it was the career for you. You'll never get married. If you did, you'd have to resign, and you'll never do that.

Now, if you are honest, you see your present work as only the beginning. Working for the A4 branch (Women Police), you deal mainly with children. You want more. You long for something juicier, something you can get your teeth into. A murder. A disappearance. Anything you can investigate.

If you did, you'd do it well. Your youth gives you an impenetrable self-assurance, bordering on stupidity, that sees you through most crises. Friends describe you as bullish or pigheaded.

This self-assurance reflects an inflated opinion of your expertise. In any situation, you believe you know best, and frequently order others away so you can do your job. Nevertheless, you are well-endowed with common sense. You may not know best, but you generally guess right.

Cast of Characters

Here are brief descriptions of the major characters in the scenario. If you need statistics for these characters, use the following for Rabinowitz and Grappa:

Abilities: Scuffling 10, Health 10
Hit threshold: 4
Weapon: –2 (Fists, expertly used)

And these for Tulving, Tom and Mrs Baddeley:

Abilities: Fleeing 5, Health 5
Hit threshold: 3
Weapon: –3 (Fists, inexpertly used)

David Rabinowitz, Jeweler

David Rabinowitz is used to being cheated, threatened and sometimes robbed. Having seen many strange objects and stranger people, he is difficult to surprise. A soft-voiced, hard-nosed man, he exudes an air of professional calm and courtesy. To portray David:

- Mime picking up an object and looking at it
- Speak exactly and calmly
- Raise your eyebrows to punctuate your conversations

Tulving

Jakob is in late middle-age. His hair, more grey than silver, is neatly brushed back, and he dresses conservatively, in a sharply ironed white shirt and pressed trousers. Although he has no eyes, he talks enthusiastically about how well he can see. To portray Tulving:

- Talk faster than usual and with higher pitch
- Look intently at the players, turning toward each player as you address them
- Gesticulate and point to things

The last two points, of course, indicate you can see.

Mrs Baddeley

Mrs Baddeley owns the Thorndike Hotel. She has been abducted by the woodland folk and sacrificed to Shub-Niggurath. Currently, she is lying within tunnels of vegetation, with roots growing through her, being slowly digested. To portray Mrs Baddeley:

- Close your eyes frequently, as though trying to block out the pain
- Breathe deeply and intently
- Tense your body

Grappa

Grappa is an elderly member of the woodland folk. Tips for playing him are on page 109.

Tom

Tom is a seven-year-old child, raised by the woodland folk. He worships the creature under the ground as most children go to church—with duty and routine, rather than conviction or passion. To portray Tom:

- Back away, very slightly, from any player that addresses you
- Grip your hands together
- Look directly at whoever speaks to you

Part I: London

Scene Type: Core

In the winter of 1935, the postcard from Jakob arrives. The writing is scribbled and wild. This, as Investigators who know him realize, is a sign he is sliding into madness, as he does every few years.

Use the postcard to bring the Investigators together. Perhaps they all receive separate postcards and meet at Rabinowitz's shop. Perhaps, alternately, one Investigator receives a postcard and tells the others.

David Rabinowitz can be rapidly traced to his shop in Golders Green, London. Normally, finding Rabinowitz requires no Investigative abilities. If your players would enjoy hunting an elusive antiques dealer, let them spend abilities to find him. **Credit Rating** locates him through society contacts; **Streetwise** finds him through underworld contacts; other abilities work at your discretion. If you do this, treat Rabinowitz's location as a Core Clue.

Rabinowitz & Goldberg, Golders Green

Scene Type: Investigative

Rabinowitz owns a small antiques shop in North London, his partner, Goldberg, being long deceased. From Golders Green underground station, the Investigators thread through a maze of progressively narrower lanes, until they reach St Andrew's Parade.

The shop is curiously easy to miss. It is unclear why; the sign is no dirtier than those of its neighbours, the façade no more obscured. Yet the Investigators pass the shop without realizing it is there, before returning to find it. This elusiveness, together with the shop's outdated frontage, makes Rabinowitz & Goldberg feel unreal.

The door stands open. The windows are opaque with dirt. When the Investigators enter, a broken bell rings raucously, the tone hanging for longer than it should. It takes time for Investigators to see in the semi-darkness.

The shop is crammed with oddities, mainly theatrical in origin: a distorted Greek mask; a pair of opera glasses; a playbill for a bastardised *King Lear,* with a happy ending. Toward the back of the shop, however, the artifacts become occult in nature: dusty crystals, blasphemous Tarot and black mirrors of volcanic rock.

At the very rear is a dirty bead curtain, with strands missing, tied aside. In the room beyond, on a table, is a carved wooden box.

Like the rest of the shop, this back room is deserted. However, the box appears placed for the Investigators to collect; a scrawled note says "Paid—Tulving—To Collect."

The following clues are available from searching the shop or questioning Rabinowitz, if he appears.

1. The box has travelled far.

- **Accounting:** To purchase the box, Rabinowitz transferred money to a bank account in Alexandria, Egypt. However, the amount transferred has been calculated in South African pounds, suggesting that the seller is from elsewhere in Africa.
- **Flattery:** You compliment Rabinowitz on his shop, allowing him to explain the theatrical items. Finally, you edge the conversation toward the box. Where did it come from, you ask? He looks puzzled. He bought it from a gentleman in South Africa, he says. But that

Deserted

The shop is deserted for dramatic effect: exploring an empty shop is peculiar, even threatening. There is no particular reason Rabinowitz is absent.

However, if Investigators become suspicious of his disappearance or are reluctant to take the box without him, bring him in. The discordant bell sounds as he enters the shop. He has been negotiating the sale of props from the Royal Adelphi Theatre. Now that he is here, he is happy to talk.

gentleman, on the telephone, claimed he had brought it from Australia.

2. Rabinowitz specializes in unusual items of guaranteed authenticity.

- **Bureaucracy:** Examining Rabinowitz's correspondence, you discover many commissions for hard-to-find items. One correspondent requests a skull held by Henry Irving, presumably while playing Hamlet. Another requests an original manuscript by Isaac Newton. Rabinowitz has gone to remarkable lengths to find these items and, in most cases, has been successful.
- **Credit Rating:** Perhaps, you suggest to Rabinowitz, he could find a particular Schubert manuscript for you. He draws himself up. Of course, he says, obscure items are his speciality. Often, he has spent weeks in the British Museum Library, scouring periodicals to trace a particular item.

There is no Core Clue for this scene. The Investigators should either travel to the Thorndike Hotel or open the box. Alternately, diligent Investigators might visit their correspondent's house.

The Rending Box

Scene Type: Floating

The box, fashioned ornately from dark wood, is about one foot high. Carvings cover its surface. Its design is curious; the upper section of the box lifts, like a bell jar, from a flat base.

Even before the Investigators open it, they sense the box is calling them. It attracts their attention, like a flashlight; even when they face away, they remain conscious of it, in the corner of their eye.

They can open the box at any time. Indeed, whenever they are uncertain about something, they know the box holds the answer. Let the Investigators open it whenever and wherever they want—on a train, in the Thorndike Hotel, in a sealed room in the British Museum Library.

Opening the Box

Do not railroad the Investigators into opening the box. They may open it wherever and whenever they like, or they may leave it closed.

If they do not open it before leaving the Thorndike Hotel (below), invoke their Drives. All Drives apart from Follower apply here:

- **Adventure:** Perhaps there is something exciting in that box.
- **Antiquarianism:** That box is ancient. You would love to see the interior.
- **Arrogance:** Why are you so afraid of opening that box?
- **Artistic Sensitivity:** The box is unsettling and beautiful. What could the interior be like?
- **Bad Luck:** Damn. You have lost a shilling. Perhaps it fell inside that box.
- **Curiosity:** You are dying to know what is in that box.
- **Duty:** If that box contains something dangerous, you owe it to God / The British Empire / Science to find out.
- **Ennui:** This is tedious. Let's open the box.
- **In the Blood:** Were you sleepwalking again? Here you are, at three in the morning, standing in front of the box.
- **Scholarship:** Whatever is in that box, it is of considerable academic interest. You could make your name with this.
- **Sudden Shock:** You can't go back now. You're going to wrench that box open.
- **Thirst for Knowledge:** That box contains secrets. You must know what they are.

These are hard drivers to open the box; resisting costs Investigators 4 Stability points or one third of their Stability pool, whichever is greater.

But do not use these hard drivers too soon. First, give the Investigators the chance to open the box of their own volition. And, again, do not railroad; they may, if they wish, take the Stability penalty and leave the box closed.

All that said, the Investigators almost always open the box without prompting.

Render of the Veils

Inside is a bizarre sculpture of rods and hemispheres, approximately eighteen inches high. Its shape wavers, as if it were breathing. Its geometry appears to fluctuate. The rods appear simultaneously straight and curved; the angles are too acute for the eye to follow.

Sometimes the rods and hemispheres are dull; sometimes they appear to gleam. Always it is unclear which are closer and which are further away. Indeed, the sculpture appears to rearrange itself, just beyond the Investigators' field of view. They imagine eyes peering at them, from between the rods, but disappear when looked at directly.

The Rending Box

There are also illusions of size. When an Investigator looks away, the sculpture appears to flood outwards, filling the room. When they look back, it is eighteen inches tall again.

This is Daoloth, the Render of the Veils. Fortunately for Investigators, it is not fully Daoloth, but an image, projection or aspect of him. Nevertheless, it is enough to shake their Stability and Sanity. It also, instantly, gives them a point of Cthulhu Mythos.

1 5

After this initial loss, seeing Daoloth's image gives no penalty. Instead, Investigators have a recurring hunch that, whatever problem they are pondering, studying Daoloth will reveal the answer.

Their hunch is correct. The Investigators can examine Daoloth's image, tracing its contours, becoming lost in its geometry. This study is addictive; Investigators can spend hours, even days, discovering more and more.

Studying Daoloth grants points of **Cthulhu Mythos**, only limited by the time the Investigator spends studying. An hour's study grants one point, three hours grants two, a day grants three. Additional study, for weeks and years, is unlikely in this adventure, but would eventually grant the student limitless understanding.

And, of course, limitless madness. Remember to deduct Sanity when **Cthulhu Mythos** is learned. Sanity remains capped at 10 minus the **Cthulhu Mythos** rating.

Alternately, Investigators may study the box using more conventional methods. If so, the following clues are available.

1. The box is immeasurably old.

- **Archaeology:** In the shop, you had assumed the box was of Victorian neo-Gothic design. Now, in better light, you wonder whether it is *Gothic* and therefore older. Yet even the Gothic designs are carved over others. This box is ancient.
- **Library Use:** After two days in the British Museum Library, your findings are peculiar. There are records of this box in Egypt and the Cape of Good Hope. Confusingly, however, there are earlier records of a similar box in Bavaria. You cannot trace the box's origins. It could be very, very old.

2. Cthulhu Mythos: This is Daoloth, the Render of the Veils.

- The sculpture portrays Daoloth, the Render of the Veils, who tears aside illusions and lets us see truly. He shows the patterns behind the universe, the geometry behind light. This is his image, his protrusion, an aspect of him. All knowledge is hidden inside.

Bigger on the Inside

A player may challenge you about the sculpture's size. "Did you say the sculpture was 18 inches high, but the box was a foot high?"

Tell the player yes, that is what you said.

3

When You Look Away

Here is a trick to illustrate the size-changing interior of the box. First, explain what is in the box, using the description nearby.

Then wait for the player to look away, probably at another player. Say suddenly and urgently, "As you look away, you see something huge from the corner of your eye." Simultaneously, put your open hand close to their face (but not close enough to make them flinch), representing the thing that has expanded into their visual field.

When they look back, tell them everything is normal-sized again.

Finally, as their Investigators realize what is happening, tell them the truth. The box's contents change size when you look away.

It's pure showmanship, but for the right players, it works well.

Following

Sometimes, Investigators throw the box away. If so, it should turn up again, in a series of increasingly unlikely coincidences.

For example, if they throw the box from the train, it arrives at the Thorndike Hotel, apparently posted there. If they throw it in the sea, it washes up on shore. Sometimes its appearance is inexplicable. Perhaps, for example, the Investigators suddenly find it in a clearing.

In short, if Investigators try to lose the box, it follows them. Do not use this trick more than two or three times.

Investigators can destroy the box, but the sculpture inside cannot be destroyed.

The Suckling Pig

Scene Type: Floating

Once an Investigator has looked inside the box, the world begins to turn alien and unpleasant. If possible, use this scene when an Investigator is somewhere food might be found.

On a shelf, the Investigator notices an amorphous globule, about a foot long. Oozing slightly, it is of indescribable colour—sometimes green, sometimes orange. Eyes seem to lurk inside it. To the touch, it is resilient, almost spongy.

It is a suckling pig. To anyone else, including the other Investigators, it is a perfectly normal and delicious suckling pig, with crisp skin and a rosemary stuffing. To this Investigator, it is an amorphous mass.

This scene may last a while, as the Investigators argue about the pig/blob. (For added complexity, other Investigators who have looked into the box may see something different again. For example, they may see a *rotten* pig.)

If another Investigator eats the pig to prove it is real, let them glimpse the pig in its amorphous form afterward. The glimpse lasts a moment, just long enough to turn their stomach.

If the Investigators do not venture near food, replace the suckling pig with a barking dog. One Investigator encounters an amorphous globule, making an indescribable gurgling noise. Other Investigators see a small barking dog.

However, if possible, use the suckling pig, because of the amusing possibility an Investigator eats it.

Tulving's House

Scene Type: Investigative

The white façade of Tulving's house looks on to the leafy private garden of Carlyle Square, Kensington.

To enter, Investigators must spend an appropriate ability—perhaps **Locksmith** to open the door, **Reassurance** to get a spare key from neighbors or **Evidence Collection** to find a key beneath a flowerpot. Treat this as a Core Clue.

The house's décor is modern and oppressive, with Cubist and Surrealist prints, by minor artists, jostling for attention. Scribbled notes line all surfaces and much of the floor.

This scene isn't essential; it exists only for Investigators who want to find out about Tulving before leaving London. Fill it with elements from later scenes, particularly:

- The Suckling Pig (or the alternative version, with the barking dog).
- If the players open the box, the scenes "Opening The Box" and perhaps "Spongy" or "Spongier."
- One of the books from the library in the Thorndike Hotel.

After investigating for a while, Investigators realize Tulving has gone, with his books, to the Lake District. That is where the Investigators must go.

Part II: Ravenglass

Scene Type: Travel

The journey to the Thorndike Hotel is grueling. By car, it takes seven hours from London. By train, it takes ten; the Investigators change at Barrow-in-Furness, as the light is fading, then ride through the darkening Lake District to Ravenglass. In the half-light, sleet falls on the hills, which curve like folds of flesh on a sleeping animal.

(The phrase "like folds of flesh on a sleeping animal" is significant because that is what they are. Try saying this line without the players guessing its significance. Make it sound like a throwaway description. It helps that, in the real Lake District, the hills *do* look strange and forbidding, not unlike folds of flesh.)

Ravenglass is a bleak coastal village. Five miles north, via a narrow clifftop road, is the Thorndike Hotel.

The Thorndike Hotel

Scene Type: Core

Although the surrounding landscape is desolate, it blooms with life. Even in this deep winter, birds sing. Ivy engulfs the hotel, whose pale façade seems almost to glow.

Inside, however, the hotel seems deserted. Gas lamps, on the walls, are doused. The reception seems deserted, with papers filed away. Behind the reception desk is a photograph of the owner, Mrs Baddeley, but no sign of the

lady herself. If the Investigators ring for attention, the reception bell echoes through the empty building.

On a board behind reception hang room keys. Only one, that of Tulving's room, is missing; all other guests have checked out. His room, on the top floor of the hotel, faces northward along the coast.

When the Investigators find the room, the door is open. Weak moonlight illuminates Tulving, who sits motionless at a desk, facing the window. Beside him is a cup of tea, stone cold. In the saucer are tea leaves, as though the tea had made been made carelessly and (stranger still) in the cup.

Eyes

Investigators who have looked inside the box may also see eyes, lurking in darkness and the corners of rooms, watching them. Yet these appear only in the periphery of the Investigators' vision. When the Investigators look directly, the eyes disappear.

3

No Eyes

When Investigators get particularly low on Sanity, encourage them to remove their eyes. Insist that, if they remove them, they will see better. If they do remove their eyes, tell them they can, indeed, see better now, and give them a point of **Cthulhu Mythos.**

Although Tulving is cold, he is, as the Investigators gradually realize, alive. Then they see him fully, when they switch the gas lamp on or as their eyes grow used to the dimness, and realize he has no eyes.

He has cut them out. On the table lies a sooty, bloody penknife and a candle, with which he heated the knife. The sockets are cauterized, the incisions precise and his fingers bloody. The eyes themselves lie discarded on the floor.

5

Jakob Tulving is conscious and willing to talk. He explains, excitedly, he removed his eyes so he could see better. Gesturing accurately toward to the library downstairs, he explains that the books persuaded him to do it.

Indeed, he can see. When he speaks to the Investigators, he turns to face them. When he moves, he navigates accurately between furniture and doorways. He points at things outside; look, he says, how the growth of the trees aligns with the slope of the hillside. Look, he urges the Investigators, at the patterns in the world.

He absolutely insists the Investigators continue his research. They must read the books! They must trace the patterns! They must find the thing beneath the soil! Yet, whenever he begins to explain, he looks fearful, as if his mind will break if he thinks further (see "The Knowledge" below). He knows the Investigators must complete his research, but cannot explain why.

Clearly, he is clinging to the last scraps of sanity. If he were a player character, he would have one Sanity point left. If the Investigators push him too far—if, indeed, they push him at all—he loses his mind (see "The Knowledge").

The Investigators may spend days in the Thorndike Hotel. They may easily discover Tulving's books, in the hotel library, as described below. They may also discover the following:

1. The other hotel residents left while Tulving was staying.

- **Bureaucracy:** You spend a happy hour behind the reception desk, cross-referencing the guest book against the receipts. There were guests in the hotel when Tulving arrived, but they checked out rapidly. Those guests who arrived when he was here left after one night, although they were booked for longer. There are complaints of odd behavior: howls of triumph from the library, late at night.
- **Reassurance:** You make Tulving a cup of tea. He cups his hands around it, warming himself. Speaking soothingly, you ask what happened to the other hotel guests. They left, he said. There were some when he arrived, but they left quickly. They disliked his late nights and his excitement at his studies.

2. The hotel owner, Mrs Baddeley, disappeared more suddenly.

- **Evidence Collection:** You check the rooms of the hotel guests, but find nothing suspicious. These people packed up neatly and left. However, you find it curious that the rooms have not been cleaned. Investigating this, you find the room of the hotel's owner, Mrs Baddeley. Her suitcase remains beneath her bed, her clothes in the wardrobe. Clearly, she left without packing. Her disappearance makes you more suspicious.
- **Intimidation:** You seize Tulving by his collar. Where is Mrs Baddeley, you demand? He moans.

You repeat yourself calmly. He does not know, he says. She disappeared one night. She did not say why.

3. Tulving has collected vast stores of explosives and gasoline, which he intended to use to destroy something underground.

- **Explosives:** When the morning comes, you explore the hotel grounds. At first, nothing seems greatly suspicious, until you pass the garage, where the stink of gasoline attracts your attention. Inside is Tulving's car and a stockpile of explosives, dynamite and gelignite, and drums of gasoline. When you ask what it is for, he only mumbles about destroying something beneath the soil.
- **Simple Search:** Looking for Baddeley's car, you enter the garage. Within is a huge supply of explosives and gasoline.

4. Tulving can see.

- **Medicine:** It is, of course, anatomically impossible that Tulving can see. Yet he faces you when he speaks. When you ask him to follow the tip of your pencil, he turns his head to do so. However impossible, you believe this man can see.
- **Assess Honesty:** You are convinced Tulving is not lying. His descriptions of the view from the window are perfect and without hesitation. He can see.

3

5. Cthulhu Mythos: Tulving can see patterns normal humans cannot.

- You watch Tulving as he stares from the window. This man is not mad, you realize, but one step from complete sanity. His eyes trace patterns you can only half-perceive. There is meaning to the movement of his fingers as he taps on the desk. He sees more clearly now than he ever did before.

6. Core Clue: The evil stems from Horsefalls Wood.

- **Outdoorsman:** You examine the hotel's surroundings, hoping for a sign of whatever took Mrs Baddeley. After an hour, you find flattened grass, which makes you suspicious. Following its direction, you find a clearer sign: a dead bush, the twigs broken by someone passing. Mrs Baddeley's captors were human and several. As the trees grow thicker, the trail becomes clearer, and you enter Horsefalls Wood.
- **Library Use:** At first, you are frustrated by the lack of focus in Tulving's research. What was his objective? What was he trying to find? The books are bought with a purpose, but what purpose? Then, in a crumpled note, you find a clue. Whatever he was investigating, he believes he found it in a local wood. This wood was to the northwest, overlooked by a rocky crop. You find a map. Horsefalls Wood, you wonder?
- **Cthulhu Mythos**: There are patterns in the ground, patterns of life, like ley lines, running through the Lakes. You see it clearly now! How did you survive without such insight? The lines lead clearly away from the hotel. Obsessed, now, you follow them, gazing at the ground. Eventually, the lines become bloated and distorted, but perhaps you have followed them far enough. When the other Investigators find you, you are in Horsefalls Wood.

The Investigators can find Horsefalls Wood in three ways: discovering Tulving's suspicions about the wood; tracing Mrs Baddeley's captors there; or, using Cthulhu Mythos, simply following patterns to the wood.

Library

Scene Type: Investigative

The hotel library is a secluded room, which at one time was pleasant and welcoming. Now, however, an atmosphere of oppression and tension hangs over the room. The floral wallpaper is fading, the leather on the sofa beginning to crack. The air seems to vibrate, like the wind before a storm. The sources of the tension are the bookcases, which Tulving has filled with his books.

Clearly, the hotel owners allowed him to work here. Equally clearly, he took advantage of their hospitality. Scribbled papers cover every surface. Empty inkwells lie discarded. His pen lies on a coffee table, ready to be picked up again.

The books, however, are stacked neatly, almost reverentially, as though Tulving had tried vainly to impose order on them. They are tales of myth, history and folklore, dog-eared and torn, some without covers. Taken separately, they are unassuming, cheaply printed books of local interest. Together, they exude power. This, then, is a library of Mythos tomes.

Now, have your players played the other *Final Revelation* scenarios? If so, there is one book in the library for each scenario they played: The Dying of St Margaret's, The Watchers In The Sky and The Dance In The Blood. Each has a Cthulhu Mythos clue associated with it. (If you played these scenarios within

the *Final Revelation* framing scenario, the Investigators also find a library book corresponding to that scenario. See the end of the book for all these handouts.)

Add details to make the books specific to the games you played. For example, if, when you played The Dying of St Margaret's, an Investigator dropped a lantern in the caves, put that into the story. Perhaps, even, one book is written by a former Investigator from a previous scenario. (Use this trick only once, and don't let the author be traced.)

If, on the other hand, you have not played the other scenarios, use instead the handout for "Tulving's Folklore Bestiary" on page 122. This also has a Cthulhu Mythos clue associated with it.

Untraceable Authors

Don't let the Investigators waste time tracing the authors, printers or publishers of these books. That is, don't let them follow the mystery in the wrong direction.

One way or another, these people are untraceable or uninteresting. Perhaps the book cover, where the author's name would be, is missing. Perhaps the author is anonymous. Best of all, perhaps the person is dead.

However you do it, keep the Investigators away from authors and publishers. (This will help your game in other ways. Authors and publishers are remarkably dull).

The Knowledge

Tulving is one step from complete insanity. He answers the Investigator's questions, but it breaks him.

When they first ask, he shows extreme anxiety; perhaps his hand closes on his teacup, cracking it. Tell the players their questions are pushing him closer to the edge.

If the Investigators persist, Tulving reveals any one clue (above) that normally requires **Cthulhu Mythos**, or two that do not.

Immediately afterward, his mind breaks. First, he drives a fist into something fragile—a window, a teacup, perhaps a wall. Thereafter, he constantly emits a high-pitched whine, audible throughout the hotel, occasionally broken by guttural mumbling. The Investigators have sent him mad.

Spongy

Scene Type: Floating

Pick an Investigator who has looked inside the antique box. At an unexpected moment, perhaps when they wake or enter a room, that Investigator glimpses reality.

They see an alien world. Surfaces are slippery, rubbery and angled strangely. Thick mist half-obscures everything. Object edges align in strange, swirling patterns, with a dreadful significance the Investigator cannot grasp. As they move through this world, there is no gravity, no sense of orientation, yet they cling to surfaces by an unknown force.

3

They are, of course, precisely where they were before. They are merely seeing things differently.

Turn to the other players. Explain that the affected Investigator is making strange noises, sometimes a guttural hum, sometimes a keening whine. Do they investigate? If so, the affected Investigator is awake and stumbling about their room.

Then tell the affected Investigator something new is there. Spongy, alien lifeforms are approaching, closing in on them. What do they do? (These spongy lifeforms are, of course, the other Investigators).

Now, do the other Investigators touch the affected Investigator? If so, tell the affected Investigator they are being attacked.

3

If the affected Investigator fights these spongy lifeforms, run it as a fight between Investigators.

The Investigator's strange vision continues until any conflict has been resolved (for example, until the fight ends or the afflicted Investigator is restrained). Thereafter, that Investigator sees the world normally again.

Tailor this scene to events. For example, if the other Investigators restrain the afflicted Investigator, tell the afflicted one that spongy lifeforms are surrounding and attack her. If the Investigator wakes with someone nearby, they see that person as a spongy alien. And so on, to the limits of your devious imagination.

Spongier

As the scenario goes on, let Investigators who have looked inside the box occasionally glimpse the true universe. They may see another

Investigator as a spongy humanoid figure. They may perceive strange angles or orientations.

Improvise these glimpses of true reality around the Investigators' actions, using the descriptions of horrific reality given above.

Rustling

Scene Type: Floating

Late at night, when everything is dark, the Investigators hear a rustling from the box. This rustling is Daoloth oozing into the world. An Investigator hears the rustling approaching, then feels it creeping over them, like metallic feathers. Something crawls inside their mouth, samples their blood, then retreats.

4

If the Investigators interrupt this process, the thing retreats. If they try to fight, they feel only stringy featheriness, which quickly disappears. If they light the gas lamps, the Investigators glimpse a metallic collection of rods and hemispheres, receding with impossible speed.

1 5

Part III: Horsefalls Wood

Scene Type: Travel

Horsefalls Wood lies three miles northeast of Ravenglass. The Investigators may walk from the hotel or take a small train, which runs from Ravenglass station to Murthwaite Halt.

At its edges, the wood is typically English and pleasant. The weak sun breaks through the trees, leaving dappled, blurred patterns on the grass. As the Investigators penetrate further, however, the trees become denser and the overhead canopy thicker.

In the heart of the wood, the trees become improbably dense. They grow close beside each other, sometimes into each other. Animals are everywhere; mice swarm underfoot, birds scream from treetops in impossible numbers. The wood bursts with life, as a goose fed for foie gras bursts with grain.

Through the wood run twisting corridors, in spaces between the trees, as though the forest were a creature and the corridors its veins. Deep within the wood, these corridors are the only way to progress. They are dark; Investigators need artificial light.

As they penetrate deeper, the Investigators discover a crude lean-to shelter. Inside is a filthy blanket and carved jewellery (from which the Investigators may get one of the clues below). It is not a temporary shelter; it is someone's home.

Now, overhead, the Investigators hear creaking, as though a beast high above were following. As they venture further, they hear human voices. People, in the trees and on the ground, are following the Investigators.

Woodlands Folk

Scene Type: Investigative

Then the Investigators see a child, raggedly dressed and dark with mud, staring through the trees. If chased, the child will run, but can easily be caught.

This is Tom, a distracted, staring child of approximately eight years. He is soon joined by his grandfather, a wiry, elderly man known as Grappa. Others cluster overhead and behind trees to eavesdrop. All are wary, but all will talk.

These are woodlands folk. They are dirtily and simply dressed, with a wild, staring aspect. As they talk, their minds appear occupied with something greater, their eyes darting to the trees and forest floor. As they talk, they drool slightly, without noticing.

They speak English with a thick, guttural accent that is difficult for the Investigators to understand. It is partly Cumbrian (that is, from the local area), partly from foreign parts.

If an Investigator attempts to climb the trees, make an **Athletics** check, Difficulty 6. On a success, the Investigator reaches an ancient network of half-rotten planks, leading from tree to tree. Up here, the Investigators find trinkets and objects of worship.

Within Horsefalls Wood, many clues may be gleaned by questioning the woodlands folk, examining their jewellery or studying the wood itself.

1. The woodlands folk stem from far afield, perhaps Egypt or Syria.

- **Languages:** As Grappa speaks, you listen to his accent and dialect. There are, indeed, Cumbrian influences, bordering on Scottish.

But there are other peculiarities: the voice is far back in the mouth; the '*t*'s and '*d*'s are overemphasized; there is a greater variation in pitch than is common in English dialects. There are, you believe, Egyptian influences to his speech.

- **Art History:** Scratched into the tree bark is a hideous picture of a goat. Ignoring the content, you look at the style. There are influences from African art and perhaps Islamic art.

2. They worship something, a goat or a mother, beneath the ground in the forest.

- **Reassurance:** Keeping your voice low and your open palms visible, you assure Grappa that you had no intention of hurting the child. You were merely worried, seeing him alone. With subsiding anger, he explains that the child does not need your protection. The child is protected by its mother. As his words take a religious turn, you realize this "mother" is a creature, an all-mother, beneath the forest floor.
- **Theology:** Within a hollow tree you find a shrine. There is a scratched image of a composite animal, a bull with the head of a goat and snake-like appendages, surrounded by patterns of twigs. The focal point of the shrine is a hole in the earth. It reminds you of burial rituals you saw as an African missionary. The woodlands folk, you believe, worship something within the soil.

3. Their religion has been kept secret since ancient times.

- **Anthropology:** You cannot fathom where this religion originated. Neither Grappa's language nor the shrine's twig patterns resemble any known religion. The only similarity is with prehistoric rites, known through cave drawings in Africa. How have they kept their beliefs secret for so long?
- **Intimidation:** You fire your gun at Grappa's feet. Shaken, he stares you directly in the eyes. You come closer, standing face-to-face. What is your heathen religion, you ask? You would not know, he says. It has been kept from you since the dawn of time.

4. The forest is impossibly full of life.

- **Biology:** The growth of these trees is impossible; they are too close together to survive. Their roots systems must intermingle, but you cannot see how they get their nutrients.
- **Outdoorsman:** This is not right. You have never heard so many birds overhead; their collective song is a discordant, continuous warble. The ground runs, like water, with insects. The creatures and plants in this wood are unnaturally charged with life.

2

5. There is a sticky, unnatural substance in the soil, which smells of warm milk.

- **Geology:** You rub the soil between your fingers. It feels sticky, like clay, but moister. There is an odour of warm milk. This is not natural.
- **Flattery:** The forest is beautiful, you tell Grappa, so full of life. The song of the birds, the twisting of the trees—you are surrounded by life wherever you turn. He grins broadly and his voice rises to a shout. "It is the mother," he says. She secretes her milk into the soil. You smell the soil warily. You smell warm milk.

2

6. Mrs Baddeley was kidnapped by the woodland folk as a sacrifice.

- **Intimidation:** Tired of Grappa's rictus smile and insane rambling, you raise your gun ostentatiously. Where is Mrs Baddeley? He smiles widely. Oh, we took her, she says. We sacrificed her. She was a sacrifice to our god.
- **Occult:** Although the pieces are fitting together, you cannot understand where Mrs Baddeley comes into this. The answer comes as you are looking at a woodland shrine. You have encountered other religions that revere fertility, life and nature. All demanded sacrifices. That is what Mrs Baddeley was.

7. Cthulhu Mythos: The creature is Shub-Niggurath.

- These are worshippers of Shub-Niggurath, the Black Goat of the Woods. This is where her tendril emerges, breaking through the soil. Here they worship her. She imbues the forest with life, greater than nature can provide, more unearthly, more fecund, more fruitful. Soon, she will grow so great that the Earth will burst apart.

8. Core Clue: The evil is below the heart of the forest.

- **Outdoorsman:** You follow the corridors between the trees, going where the trees seem densest. You follow the birds, judging where their song is loudest, rising almost to a scream. You follow the path

of the insects. The three together, with some educated guesswork, lead you to the heart of the wood. There the forest floor curves downwards into four great tunnels.

- **Oral History:** You sit with Grappa, as he tells you about the forest. As he grows more excited, he spits as he talks, his language becoming less comprehensible. Indeed, some words do not sound English, but ancient and guttural. With venom and pride, he rises and leads you into the heart of the forest, where four great tunnels lead downwards.

Grappa

Scene Type: Investigative

Grappa wears simple, hand-woven clothes, filthy and stinking, and has matted, earthy hair. When he smiles, the white teeth split his dirty face like a razor slash. At first, he appears passionate; later, it becomes clear he is mad.

He willingly talks about his religion. When the Investigators use Interpersonal abilities, he reveals clues. When they uncover clues by other means, such as investigating shrines or the forest, he confirms these clues, with a half-sane religious rant.

For example, if the Investigators discover the milk in the soil using **Geology**, Grappa rants about it. It is her milk! It is milk she secretes into the soil, her gift for us, her unnatural and twisted life! The stink of milk is our reminder that one day, and so on, and so on.

Have fun with this. Rant at your players. Refer frequently to "the mother" or "the goat." Sound as insane as you can. Speak fast, almost too fast to think what you are saying, letting your pitch swing from high to low, as though you are hysterical. Focus on one player when you speak. Make Grappa's ranting sound genuinely strange and unsettling.

(Do not mention Shub-Niggurath, however. The Investigators need **Cthulhu Mythos** to discover that name. Admittedly, experienced players will quickly realize who "the goat" is, but they must pay an ability point for the satisfaction of hearing the name.)

The Tendril of Shub-Niggurath

Scene Type: Core

It is difficult to tell where the forest ends and the descent begins. At first, the pathways lead through the forest, then gradually descend, darkly enclosed by the canopy above. The paths then slope downwards more sharply, yet it is unclear whether the Investigators are descending into a dell or beneath the soil.

Slowly, however, the Investigators realize they are below ground. Birdsong, which had crescendoed to a maddening howl above, becomes more distant. Corridors become passageways, lined with moss, roots and unidentifiable vegetation.

Now, which Investigators looked in the box? From now on, those that did see everything as *horrific* and *monstrous*. Those who did not see everything as merely inexplicable; they see underground tunnels and a dying woman, but nothing definitively supernatural.

In the tunnels run rivulets of a familiar-smelling clear liquid. Its odour catches the Investigators at the backs of the throat. For Investigators who looked inside the box, this is bile. For others, it is merely sap.

Ask in which order the Investigators descend; the tunnel is wide enough only for two Investigators to walk side by side. Give those leading a **Sense Trouble** roll, difficulty 5. If they succeed, they notice the passageway twisting sharply down into a vertical drop. If not, they do not notice, and give them an **Athletics** roll, difficulty 5, to prevent their fall. If they fail, they take damage as below.

The Investigators must climb down. If they use a rope, ask where they secure it. A safe descent requires an **Athletics** roll, difficulty 6. After all, the Investigators are descending into an unknown blackness. Furthermore, everything is slippery with bile. It is difficult to find footholds or handholds.

Make it clear, before the players roll, failure means certain injury and possible broken limbs. The first Investigator to fall breaks a leg. After the fall, this Investigator can drag themselves along to pursue the Investigation, but takes +3 to the difficulty of future **Athletics** rolls. That, of course, includes the difficulty of getting back up.

Having descended, the Investigators land on a mat of slippery vegetation. As they follow tunnels downward, they sometimes find a dead badger or fox, decomposing within the vegetation, caught in the roots.

Suddenly, the Investigators hear an animal cry, like a puppy whimpering. As they approach, the noise sounds more human, as if someone has just stopped crying, and is breathing shakily through the tears. Finally, in a widening of the tunnel, they see a woman.

This is Mrs Baddeley. She seems, at first, to be lying on the tunnel floor. She appears to be impaled on a root—although Investigators who looked in the box see the root *growing through her*. She appears partially decomposed but is conscious. She begs to be killed.

3/4

(Stability 3 for seeing her; 4 for killing her.)

The tunnels continue indefinitely downwards. The following clues are available, although 2 and 4 are only available to Investigators who have looked inside the box.

1. Mrs Baddeley cannot be saved. If she is not killed, she will die a slow, painful death.

- **Medicine:** Taking your lantern closer, you examine Mrs Baddeley. Perhaps, if you amputate the leg in which roots are embedded, you could free her. Then you see the thick root growing through her stomach. There is no hope. She will die slowly unless you intervene.
- **Outdoorsman:** Mrs Baddeley reminds you of a horse you once saw, trapped in barbed wire. The more it struggled, the more it tore itself apart. It made a similar noise to Mrs Baddeley, seemingly trapped and desperate for the relief of death. There is nothing you can do for Mrs Baddeley. Unless you kill her, she will die a painful death.

2. Mrs Baddeley and the dead animals are being slowly digested. Anything that remains here for more than a few hours will be similarly digested.

- **Medicine:** Although Mrs Baddeley remains alive, she strangely appears to be decomposing. Yet as you examine her injuries more carefully, you realize the decay is not in decomposition; rather, it reminds you of an acid burn you once saw. It resembles *repeated* acid damage. Perhaps it is stomach acid. Perhaps Mrs Baddeley and the creatures are being digested. If so, anything that stayed down here would meet the same fate.
- **Biology:** Mrs Baddeley reminds you a half-digested mouse you once saw, while dissecting a large rat. Mrs Baddeley and these creatures are slowly being digested.

4

3. Core Clue: Despite the dampness, this structure would burn, given a sufficient quantity of gasoline and explosives. Clearly, that is what Tulving intended.

- **Explosives:** Despite being deep underground, this place would burn well. It is not particularly damp, especially deeper down. If you placed explosives carefully near the top, then added a huge quantity of gasoline, the fire could spread deep inside. Clearly, Tulving knew what he was doing.
- **Physics:** When you stub a cigarette out, the vegetation smoulders briefly. Of course—the deeper you get, the less dampness penetrates. Your mind races. Given enough gasoline, you could start a fire that would penetrate deep into these tunnels. Given enough explosives, you could open the top of the structure, allowing air to rush in. The fire would burn deeper and deeper, drawing in air from above. You could destroy it all.

4. Cthulhu Mythos, Core Clue: Shub-Niggurath wants one Investigator as a sacrifice. If she does not get one, she will take all of them.

- You must satisfy Shub-Niggurath's thirst. If one of you is sacrificed, the others may leave. If not, she will take all of you. Thereafter, she will hunger again, but that is not your concern. The woodland folk will find other sacrifices.

When the Investigators have got the Core Clue, plus any others they want, the vegetation creeps toward them. Roots pluck at their feet, as if trying to encircle them. One sharp root digs through the sole of a boot, as if trying to impale the foot. The bile runs, not in streams, but in rivers. The vegetation is trying to digest the Investigators.

1 7 [3]

(Investigators who avoided looking inside the box need not make a Stability roll; they merely think the tunnels are collapsing. Note, also, these losses are less than those listed in the rulebook for seeing Shub-Niggurath. After all, the Investigators have not seen her in her full glory. Yet.)

If they leave one Investigator behind, the attack stops. Otherwise, they must run.

The Climb

Scene Type: Core

As the Investigators ascend, the tunnels constrict and roots curl toward them. Soon they reach the vertical shaft.

Did they leave a rope? If so, it has fallen, now lying coiled at the bottom of the shaft. (Remember the forest *is* Shub-Niggurath. If they tied the rope around a tree, something has cut it; if they tied it around a root, the root has released the rope.)

The Difficulty Number to climb back up is 7. If anyone has a broken leg, their Difficulty Number is increased by 3. Use the Assistance rules, above, if you need to.

Did the Investigators leave one of their own behind? If not, the shaft begins closing. For any Investigators that climb immediately, the Difficulty Number is 7. For any that delay, perhaps to assist others, the Difficulty Number is 8. After that, the shaft closes completely and escape is impossible.

If the players have clever ideas about escaping from the shaft, be flexible. For example, if they decide to hold the shaft open using a lantern pole, give them a roll to do this. This might, for example, allow Investigators a second climbing attempt before the shaft closes. Eventually, however, the time for ideas is over and the shaft shuts.

If they escape, they are free to leave Horsefalls Wood. If not, they remain inside, as bile builds around their feet and roots creep toward them.

2

Forest Fire

Scene Type: Core

Once free of the forest, the Investigators look back. Will they walk away? Or will they destroy Horsefalls Wood?

Break A Leg

Normally *Trail of Cthulhu* avoids injuries like broken legs, because they slow down investigations. Here, however, they add spice. In particular, they create an interesting decision later: If the injured Investigator fails to climb out, will they have to stay inside, to be digested by Shub-Niggurath? Will others help or abandon that Investigator?

Assistance

For the descent into the shaft, use the following rules for Assistance. They are related to the Piggybacking and Cooperation rules from the main rulebook, but not identical.

To assist an Investigator to make a General Ability roll, other Investigators may contribute points from that General Ability. First they must spend 1 point to assist. Then they may contribute ability points directly.

For this particular descent, only one other Investigator may assist, and they may only contribute 2 **Athletics** points.

After all, there is a limit to how much help you can give; once someone is on the rope, they are on their own. Even if you truss someone up and lower them down, they may smash against a wall or entangle themselves on a root.

If the Investigators want to destroy the forest and the thing inside, let them. The easiest way to do this is to use Tulving's gas and explosives. However, if the Investigators have a better way, let them use it.

This is the time for epic set-pieces, normally out of place in the Purist style of *Trail of Cthulhu*. For example, a military character might spend **Credit Rating** to call in an a bomber plane. A criminal might use underworld connections to burn the forest. A pilot might drop a bomb from a hired plane.

Doing this will kill the woodland folk; they will not willingly leave their god, no matter what the Investigators do. Let the Investigators destroy Horsefalls Wood, but they destroy the woodland folk, too.

Throughout this final section, be open to clever ideas. If they can think of a way to evacuate the woodland folk and destroy the forest, let them do it. Try using the following phrase: "If these tunnels are a tendril of Shub-Niggurath, burning them would seriously harm her." The "*if*" is significant because, in fact, this is *not* a full tendril of Shub-Niggurath. It is a tiny part of it. Burning these tunnels will barely damage her at all.

Epilogue: The Turning of Shub-Niggurath

Scene Type: Core

In the end, the Investigators stand on a Lake District hillside.

Did they leave the forest intact? If so, describe a somber ending. The creature below is insatiable. More sacrifices will come.

Or did they destroy Horsefalls Wood? If so, describe an ending that, at first, is upbeat. The Investigators have made the world safer. Did they believe the wood was a tendril of Shub-Niggurath? If so, perhaps they have done the impossible. They have struck a blow against the Mythos.

Ask the Investigators where they go from here. Let them think the scenario has ended.

And then Shub-Niggurath turns. The hills of the Lake District, so reminiscent of an animal's flesh, are revealed as exactly that. They move, as a sleeping animal shifts in its sleep. The ground on which the Investigators stand moves too, tilting and pulling to the side. Where once the Investigators stood on a plateau, they now stand on a hillside. Everyone sees this, whether or not they looked in the box.

4 [3] 11 [5]

Whatever the creature is, it is vast. The entire landscape moves, as far as the horizon—every tree, building and hill twists and writhes. Whatever damage the Investigators did, it is nothing. It has only caused Shub-Niggurath to turn in her sleep. (If the Investigators do not damage Shub-Niggurath, she still turns. It's too good an ending to waste.)

Finally, everything is still. The Investigators stand on Shub-Niggurath, the ancient creature whose tendril is the Lake District.

The Dying of St Margaret's—Handouts

A Letter to *The Times*, 13 May 1914

[As their investigation at St Margaret's begins, the Investigators are already familiar with this letter and the event it reports.]

The Times

13th May, 1914

Letters

A Shooting Star

Sir - A short time after 11 o'clock last night, a meteor of extraordinary size and brilliancy was seen to shoot down in the south-eastern sky. It passed over the Great Bear, heading in a south-westerly direction, towards Saturn, as it were. Its light was white and of amazing brightness, while its long tail was a fiery red. In appearance it was larger than Mars, that had just risen like a great beacon over the hill top to the right.

Doubtless the wonderful phenomenon has to do with the most extraordinary change that has so suddenly taken place in the weather. While for weeks past it has been of the most boisterous and stormy description, a change occurred overnight, and this morning broke with hard frost, and the day has been of the loveliest sunshine, with a pretty keen high wind prevailing. It will have cheered the hearts of the farmers. - I am, &c.

ALEXANDER SCOTT

The Astronomical Medium–excerpt

[As their investigation at St Margaret's begins, the Investigators are already familiar with this article and the event it discusses.]

THE ASTRONOMICAL MEDIUM

The Author hopes that no reading will so far misunderstand his intention, in the present instance, as to suppose that a train of thought professedly theoretic, or hypothetical, and on a subject connected with which we have no direct information beyond what the Scriptures incidentally convey, is to be allowed to interfere with, or to supersede, any article of our religious belief. That which follows, then, is mere speculation, and if it seems fanciful to the reader, then the Author would be glad for his work to be interpreted merely as a retelling of folktales. This work is submitted, then, firstly for the reader's enjoyment, and only secondly for his enlightenment.

...Yet we must attempt to understand these proven phenomena, displayed both by theatrical spiritualists and in more scientific studies, and interpret them in the light of our Christian beliefs and of the scientific method. It seems clear that these events are not of this Earth, being unmentioned in the Bible and incomprehensible in terms of our advanced sciences. We are compelled, then, to entertain the conjecture that the spirits, beloved of mediums and spiritualists, are in fact entities from other worlds; and if it seems improbable, considering the astronomical distances, that humankind would be capable of contact with these beings; then we might reference the folktales of Finland, which tell of beings descending from sky to earth in ancient times and resting thereunder. Indeed, such tales are by no means uncommon, for Bavarian legends tell a similar tale.

x

A Scientific Paper

[From the *New Journal Of Experimental Cosmic Physics*, found during investigation at Edwards Laboratory in the Royal College of Science (Clue 2; see page 54.)]

which, although not proven by the results observed, is consistent with them.

Other points may be briefly considered. The results showed an unexplained and erratic variation in amplitude at intervals, their amplitude varying rapidly for a period of one to two minutes before again assuming stability. Such periods of variation were excluded from the results and calculations shown above. Nevertheless, it is important to note that they occurred after controlling for all known external factors that might affect the amplitude in such a way. Indeed, no known factors would affect the amplitude in the "pulsating" pattern observed. Although this study does not attempt to explain this phenomenon, it is noted here for the benefit of future researchers and may merit further investigation.

To conclude, then, no evidence was found of the observations that Walker's theory suggests, leading us to

25

Further Observations Regarding the Himalayan Expedition

[An 1816 article in the *Journal of the Institute of Geography* found during the investigation at the Old Library, University of Brtichester (Clue 1; see page 58).]

JOURNAL OF THE GEOGRAPHICAL INSTITUTE 115

I should like to add some observations to the interesting discussion of "Himalayan zoological discoveries" that occurred in the January number of this journal.

In 1909, Barratt reported finding a cadaver resembling that of a monkey, which he noted incorporated known parts of other anatomies, including the spine of a fish and the use of moss in binding the limb joints. He suggests that this creature was at least partly constructed by human hand, formed a part of some religious ritual as yet unknown.

Although I would not question that the addition of certain parts of the specimen's anatomy could only have been the result of human construction, an observation from our own recent expedition suggests the matter may be more complex than it at first appears. We observed a warm, and hence recently-deceased, ape, larger than others we had observed and with an appearance of deformity in its skull. Although a full internal examination was not possible, a brief study confirmed Barratt's observation of the use of moss in limb joints and the incorporation of other creatures' anatomy, including those of fish. The recent death of the specimen suggests it had not been constructed.

I would hence tentatively suggest that the creature in some way assumes aspects of other anatomies. The mechanism by which this takes place is as yet unknown but may be worthy of further investigation.

ENGLAND & WALES
English Miles
LAKE DISTRICT.
LONDON
BRIDLESTER

The Dance in the Blood—Handouts

Timeline

[As the scenario progresses, the Investigators discover more of its backstory. To help them keep track, use the following timeline. Cut it into strips, one for each date. Then, as the Investigators discover facts, give the players the corresponding strip of the handout.]

1867	The town by the lake, Lower Manesty, is destroyed. It is later rebuilt as Low Manesty.
1816	Low Manesty is destroyed. It is later rebuilt as Manesty, the village that now stands.
1870	Jack is born.
1900-1904	The Investigators are born.
1905	The Investigators are photographed as children. Also in the photograph are their parents, Jack and Victoria, and another child, Geoffrey.
1905	Victoria has the children adopted.
1905	Victoria commits suicide.
1925	Jack, now aged 55, marries Mary.
1929	Jack and Mary conceive twins. Jack disappears.
1930	The twins, Lisa and Bethany, are born.
1935	The present day.

Entry in Sotheby's Catalogue

[A friend at the London auction house may read this description over the telephone to an Investigator during the investigation of the dreams "The Sacrifice" and "The Dance." (See "Dreams" on page 80, Clue 1.)]

Sotheby's

A fine and exceptionally rare curved knife of uncertain origin

Of a grey-green metal that is perhaps an alloy of copper, the blade of gently curving shape, inscribed with symbols (language unknown, perhaps Aramaic), the hilt similarly engraved

Quantity: 1 9 inches

Family Tree

Use the following handout to keep track of the family tree. There are two versions. If you are using the sample Investigators, use the first one; the Investigators are shown in brackets. If the players are creating their own Investigators, use the second, and fill in their first names and birthdates.

The Investigators may find this family tree during the investigation of "The Maiden House" on page 89 (Clue 4).

1.

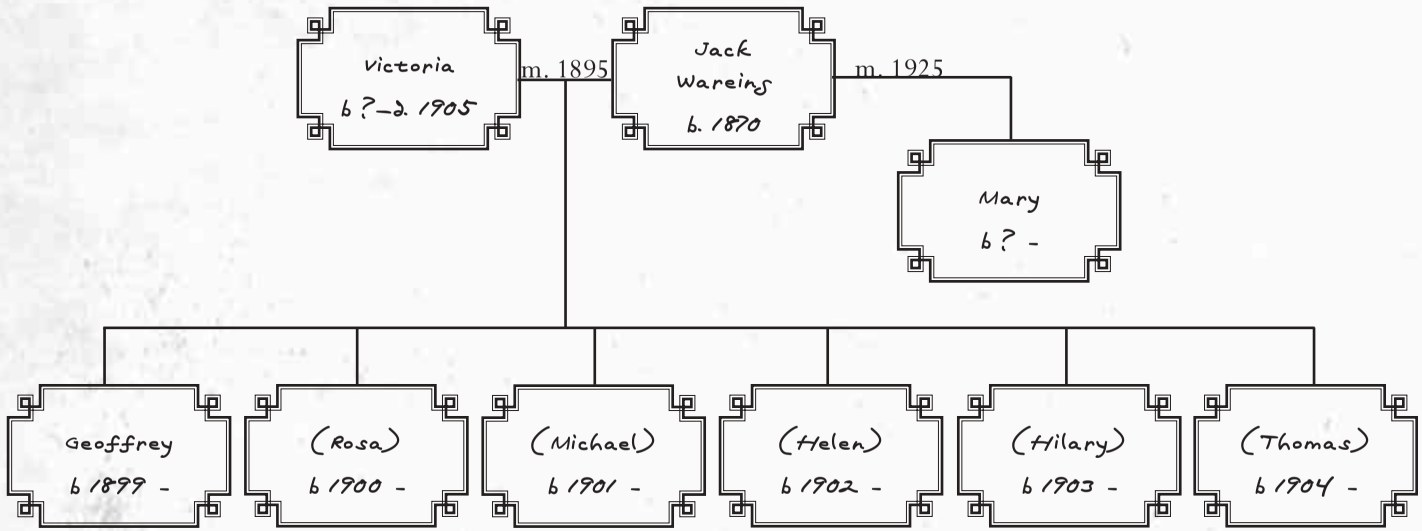

2.

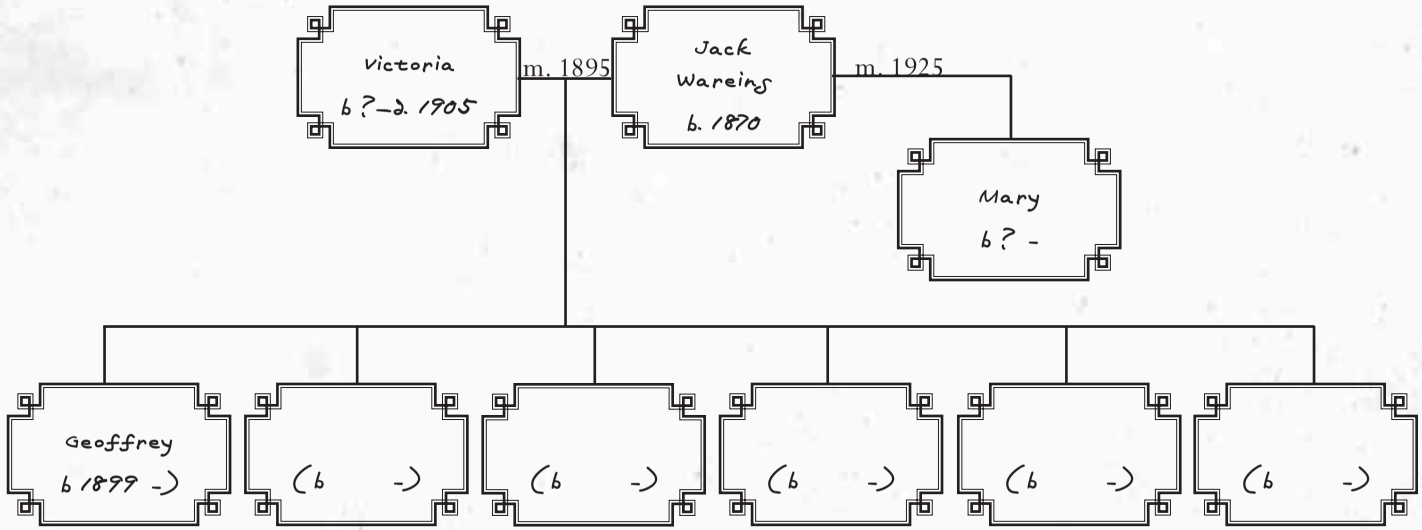

A Child's Story in an Exercise Book

[Found during the investigation of "The Old Schoolhouse" on page 84.]

Once upon a time there was a little girl who lived in Manesty and one day she found a grey sliming hand reaching through the earth, she did not know what to do.

What is this she asked but her mummy and daddy did not know. The next day when she was walking through the woods she saw a monster and it was all wormy and slimy and it smiled at her. The little girl went home and told her mummy and daddy but they did not believe her.

Then the wormy slimy monsters under the earth came up that night and they ate the little girl up and her mummy and daddy and they tore the house up and ate its bricks.

Letter to the Bishop of Carlisle

[Found during the investigation of "Low Manesty" on page 87 (Clue 3).]

Keswick, 1854

My Lord,

I am instructed to report on Derwent Water and the settlements there surrounding and, in particular, the village of Manesty, with particular reference to villages of similar name formerly standing on that site.

My conversations with those who live in Manesty have led me to hear such blasphemy that I hesitate to place it before your Lordship. Nevertheless, I humbly submit that the blasphemy originates not in the speech of those to whom I have listened but in the creatures that they describe.

And I further humbly submit that these creatures, which are referred to in superstition and folklore, possess a tangible existence, although not a godly one. And I further humbly submit that they are blasphemous devils or demons, which it is our Church's duty to fight.

May I therefore humbly recommend to your Lordship that further investigations be instigated as a matter of pressing urgency to locate these blasphemous creatures.

I have the honour to be,
Your Lordship's,
Obedient, faithful servant,

Benjamin T. Bradley

The Rending Box—Handouts

A Postcard

[This postcard (the scenario hook) arrives from Jakob Tulving. See "The Hook" on page 94.]

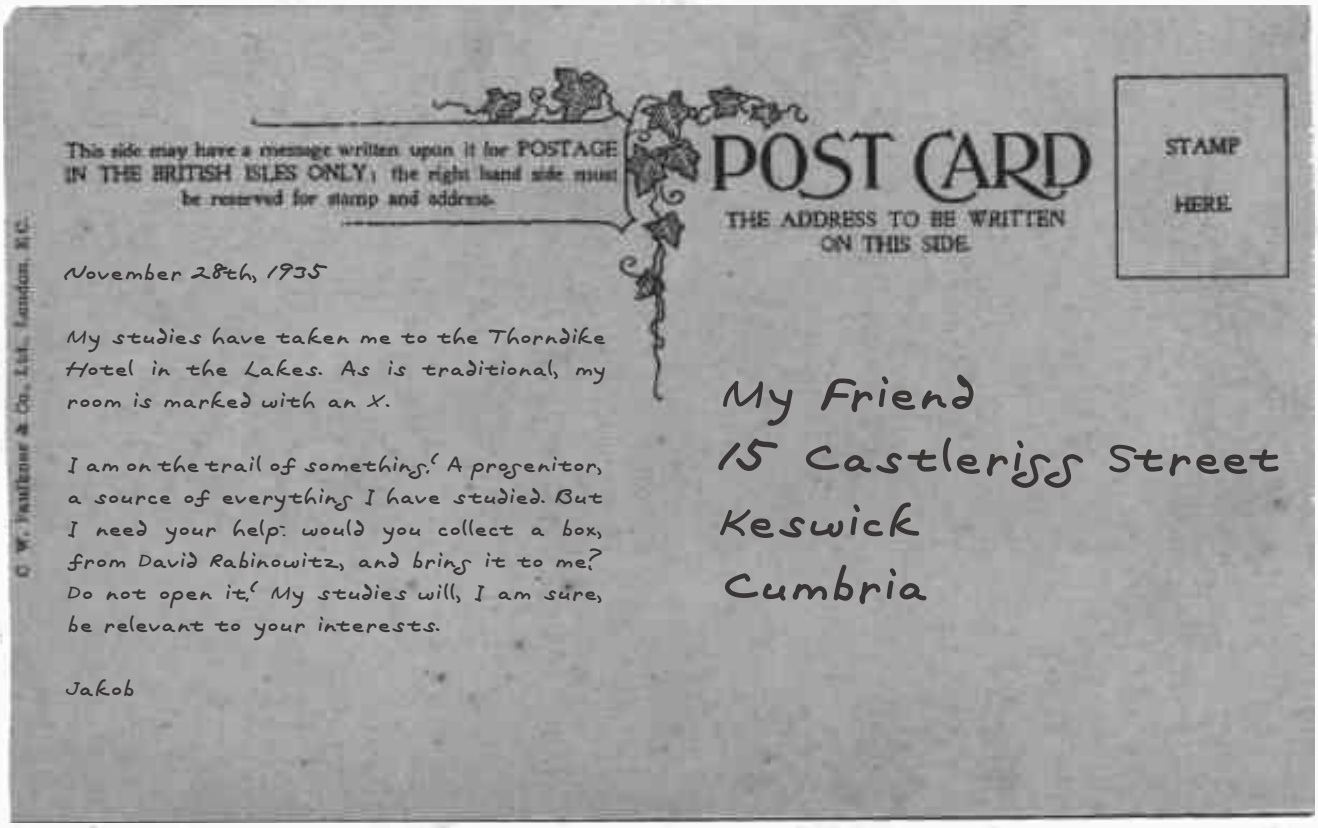

This side may have a message written upon it for POSTAGE IN THE BRITISH ISLES ONLY; the right hand side must be reserved for stamp and address.

POST CARD

THE ADDRESS TO BE WRITTEN ON THIS SIDE

STAMP HERE

November 28th, 1935

My studies have taken me to the Thorndike Hotel in the Lakes. As is traditional, my room is marked with an X.

I am on the trail of something. A progenitor, a source of everything I have studied. But I need your help: would you collect a box, from David Rabinowitz, and bring it to me? Do not open it. My studies will, I am sure, be relevant to your interests.

Jakob

My Friend
15 Castleriss Street
Keswick
Cumbria

Tulving's Folklore Bestiary

The books (found in the Thorndike Hotel's library—see "Library" on page 105) are a curious amalgam of Lake District folklore, amounting to a bestiary. One book details bird-like creatures, which watch from the rooftops, made of body parts of other animals. Another details a monstrous, wormlike race, swimming through the soil.

The stories are bleakly hopeless. In many, the protagonists are driven mad or chased by the monsters. In one, they emerge as monsters themselves.

Cthulhu Mythos: The creatures are spawn of something greater, Shub-Niggurath, who sleeps at the centre of the Earth, saturating the soil with her milk. Her tendrils grow upwards, one reaching into the Lake District.

The Dying of St Margaret's

This first-person account begins conventionally, with the protagonist journeying to a remote island, off the Lake District's coast, searching for a lost acquaintance. This person takes a job at a girl's boarding school, the eponymous St Margaret's.

At first, the tale resembles a ghost story. It deviates, however, when the protagonist discovers an old workshop beneath the school, where their acquaintance researched ancient monsters.

Following their trail, the protagonist ventures into the caves beneath the school. There, the lost acquaintance lies crumbling but alive. The ending is curiously unsatisying: Deep underground, the protagonist sees a gaseous monster and goes quietly mad.

Cthulhu Mythos: The creature is a Colour, which fell from the stars to feed on the Earth. Textual patterns indicate the Lake District soil is particularly fertile and attractive to the Colour. It is saturated with the milk of Shub-Niggurath, who lies sleeping beneath the hills.

Turning on my torch, I descended into the workshop. It was littered with notes, books, sketches and maps. And there he was! There was his desk. I recognized his handwriting at once.

Yet, as I turned the pages, I did not understand what I was reading. Had he gone mad? He wrote of a creature, lying beneath the school, drawing the life out of the bricks and people. A chill, alien and unnatural, descended….

As I descended into the caves, the damp sand slid beneath my feet. Tunnels twisted, deeper and deeper, but I was driven to unearth the secrets below. Rounding a corner, I saw him.

He lay, moaning weakly, and his hand twitched as if trying to reach me. He was surrounded by dust and seemed insubstantial. When he lifted his hand, it crumbled. As I moved closer, I disturbed the air, and the hand collapsed completely. I knelt, looking in his eyes, not daring to move, nor daring to touch.

114

The Watchers in the Sky

As the story opens, the protagonist is watched by birds, who stare from the rooftops. When she dissects this animal, it appears assembled from parts of other animals. Investigations lead her to a Lake District village, where the locals have facial tics, identical in every villager.

Eventually, she traces the creatures to an abandoned mine. She finds thousands of the things, all misshapen, all assembled from parts of other animals. As she descends, the creatures wake and she flees.

At the end, the protagonist returns home. She finds her husband with the same facial tic as the villagers. In some unexplained way, he has been "infected" by the creatures.

Cthulhu Mythos: The bird creatures are creatures of no name and little intelligence. They are the spawn of a greater being that sleeps beneath the earth, its tendrils reaching upwards. One tendril reaches into the Lake District. The bird creatures are its runts, the offshoots of its endless fecundity.

THE WATCHERS IN THE SKY

Switching on her lantern, she descended into the mine. At first, there was little of note. Then she saw a creature in front of her, sleeping. The same one that had watched her? Or a different one? As she moved the lantern's pool of light, she saw many of the things, all identical, all roosting. It could have been any of them.…

Suddenly, the air was still. What had changed, she wondered? Instantly, suspiciously, she looked at the nearest creature. Its stolen eyes were open, watching her. She looked at the others. They were all awake. They were all watching.

They flew at her. She ran, trying not to scream, trying to remember the way she had come. She felt the air rush behind her, but did not look back.

67

The Dance in the Blood

In this tale, a man travels to Keswick, a Lake District resort, where he discovers he is adopted. His natural parents are from the nearby village of Manesty. For reasons that are unclear, he also meets his siblings in Keswick.

At first, the story is a touching tale of family reunion and self-discovery. There is, in fact, self-discovery, but of an unconventional sort: The protagonist and his siblings discover themselves to be monsters under the skin.

At the end of the book, there is a ritual, in which the protagonist buries his brother. By doing this, the book explains (with rather too much expository text), the brother will join similar monsters beneath the soil.

Cthulhu Mythos: These are the Dancers, the spawn and servitors of the fertile creature under the Earth. They are her deliberate spawn, her favoured children. Their fortunes rise and fall with her heartbeat. Every 119 years, they grow strong and rise to the surface.

58

At first, I tried to deny what I saw. There I was, in the photograph, as a child. Yet the family surrounding me was not mine. Was I, indeed, the child of strangers? If so, who were my new family? I resolved to discover more, if only to disprove my suspicions....

I ran my knife through my brother's skin. It was surprisingly easy, like cutting cloth, and soon I discovered why: under the loose skin was a wormlike torso. As I remembered from my dream, I sliced his neck and the backs of his legs. I pushed him into the grave and heaped soil on top of him.

When the dancing had finished and the sun was rising, I put my hand into the soil. My brother was gone. I can only imagine he has gone to the land of my dreams. He swims beneath the soil, worshipping the thing beneath. One day, I will join him, and worship her too.

The Final Revelation: An Additional Book for *The Rending Box*

If you are playing *The Final Revelation* as a frame for the other Purist scenarios, include this book among those the Investigators find in Tulving's library in Part II of *The Rending Box*.

In this tale, "The Final Revelation," a woman joins a group of troubled individuals meet in the cellar of an occult bookshop in London to try to make sense of the strange revelations they have had. This leads them to investigate other stories of indescribable menaces.

As they uncover secrets, they find their world falls apart in ways consistent with the secrets they have learned. They start to find hints the world is not as they once perceived it, time itself has failed, and the world has already been destroyed by the monsters they feared. The book hints the protagonists no longer exist in any true sense, and may be no more than memories of a lost humanity in an unimaginably alien mind.

The last few pages of the book have been ripped out and are nowhere to be found. Tulving can confirm the pages were missing when he acquired the book.

Losing all self-restraint, I took hold of the newsagent's wrist and shouted at him. Why was he still selling the same newspaper? How could it still be the 12th of November? He snatched his hand away, and as he did so I could feel the skin on his wrist come loose. The newspaper crumbled to dust in his hand.

I ran out into the street, sobbing. Passersby stopped, shocked by the spectacle I was making, but none of them offered assistance. Each just stared at me, and as I met their eyes I could see the inhuman deformities in each.

As the reality of my situation dawned on me, the only thought my head would contain was the hope that death would prove a release.

257

Stability Loss Table

Incident	Loss
You see a fresh corpse; you witness a killing	1
A human opponent attacks you with evident intent to do serious harm	2
You are in a car or other vehicle accident serious enough to pose a risk of injury	2
You experience a strong unnatural sensation such as intense *déjà vu,* "missing time" or hallucinations	2
You witness acts of torture	2
A human opponent attacks you with evident intent to kill	3
You kill someone in a fight	3
You see a particularly grisly murder or accident scene	3
You see a supernatural creature from a distance	3
You witness an obviously unnatural, but not necessarily threatening, omen or magical effect—a wall covered in horrible insects, a talking cat, or a bleeding window	3
You see hundreds of corpses; you witness a large battle	4
You see a supernatural creature up close	4
You spend a week in solitary confinement	4
You learn a friend, loved one, or Source of Stability has been violently killed	4
You discover the corpse of a friend, loved one, or Source of Stability	5
You are attacked by a supernatural creature, or by a friend, loved one or Source of Stability	5
You witness a clearly supernatural or impossible killing	5
You witness or experience an obviously unnatural, and threatening, omen or magical effect—a cold hand clutches your heart, a swarm of bees pours out of your mouth	5
You kill someone in cold blood; you torture someone	5
You see a friend, loved one, or Source of Stability killed	6
You are tortured for an hour or longer	6
You discover you have committed cannibalism	6
You are possessed by some outside force, but conscious while it operates your body unspeakably	7
You speak with someone you know well whom you know to be dead	7
You are attacked by a single gigantic supernatural creature or by a horde of supernatural creatures	7
You see a friend, loved one, or Source of Stability killed in a particularly gruesome manner or in a way you are helpless to avert	8
You kill a friend, loved one, or Source of Stability	8

Cthulhu Mythos Stability and Sanity Pool Loss Table

Revelation or Intuition	Stability	Sanity
Some aspect of the Mythos is behind this mystery; specifics are either comfortably distant in space or time, or not immediately relevant to your larger concerns	2	0
This Mythos truth poses a clear and present danger to innocents; this truth goes deeper, reaches back farther, or has wider implications, than you previously believed	3	1
This Mythos truth poses a clear and present danger to you or your loved ones; this truth is global or epochal in scope	4	1
This Mythos truth shatters one of your Pillars of sanity	6	2
This Mythos truth could destroy the world or is doing so right now, probably inevitably; this truth proves your Drive to be meaningless or doomed	8	3